Caddy 1996 , Polo Classic 1996 ➤

Diesel injection and glow plug system

Engine ID	1Y								

Edition 11.1995

Protected by copyright. Copying for private or commercial purposes, in part or in whole, is not permitted unless authorised by Volkswagen AG. Volkswagen AG does not guarantee or accept any liability with respect to the correctness of information in this document. Copyright by Volkswagen AG.

satelettronica

List of Workshop Manual Repair GroupsList of Workshop Manual Repair GroupsList of Workshop Manual Repair Groups

Caddy 1996 , Polo Classic 1996 ➤

Diesel injection and glow plug system

Protected by copyright. Copying for private or commercial purposes, in part or in whole, is not permitted unless authorised by Volkswagen AG. Volkswagen AG does not guarantee or accept any liability with respect to the correctness of information in this document. Copyright by Volkswagen AG.

Repair Group

01 - Self diagnosis

23 - Mixture preparation, Injection

28 - Glow plug system

satelettronica

Technical information should always be available to the foremen and mechanics, because their careful and constant adherence to the instructions is essential to ensure vehicle road-worthiness and safety. In addition, the normal basic safety precautions for working on motor vehicles must, as a matter of course, be observed.

All rights reserved.
No reproduction without prior agreement from publisher.

Copyright © 2011 Volkswagen AG, Wolfsburg

00056406420

Contents

01 - Self diagnosis 1

1 Self diagnosis 1
1.1 Self diagnosis 1
1.2 Function 1
1.3 Technical data of self diagnosis 1
1.4 Connecting fault reader V.A.G 1551 and selecting engine electronics control unit 2
1.5 Interrogating fault memory 3
1.6 Fault table 4
1.7 Erasing fault memory 6
1.8 Final control diagnosis 7
1.9 Reading measured value block 10

23 - Mixture preparation, Injection 12

1 Servicing fuel injection system 12
1.1 Servicing fuel injection system 12
1.2 Safety precautions 12
1.3 Rules for cleanliness 12
1.4 Fitting locations overview 13
1.5 Servicing injection pump 15
1.6 Servicing fuel filter 20
1.7 Checking fuel system for leaks 21
1.8 Removing and installing injection pump 22
1.9 Checking and adjusting injection pump timing 27
1.10 Checking and adjusting idling speed, idling speed boost and governed speed 30
1.11 Idling speed boost actuator 32
1.12 Checking commencement of injection valve 32
1.13 Checking engine temperature sender 33
1.14 Resistance figures for engine temperature sender 33
1.15 Checking idling speed boost valve 34
1.16 Checking full throttle stop valve 34
1.17 Residual volume basic setting 35
1.18 Removing and installing injectors 36
1.19 Servicing injectors 37
1.20 Checking injector nozzle valve tip for damage, injection pressure and for leakage. 38

28 - Glow plug system 40

1 Checking glow plug system 40
1.1 Checking glow plug system 40
1.2 Checking glow plug current consumption 40
1.3 Checking glow plugs 41
1.4 Glow plugs with burned electrodes 41

Volkswagen AG. Volkswagen AG does not guarantee or accept any liability with respect to the correctness of information in this document. Copyright by Volkswagen AG.
Reproduced by copyright authorised by Volkswagen AG. Volkswagen AG does not permit the use of this document in worldwide computer networks.
satelettronica

Protected by copyright. Copying for private or commercial purposes, in part or in whole, is not permitted unless authorised by Volkswagen AG. Volkswagen AG does not guarantee or accept any liability with respect to the correctness of information in this document. Copyright by Volkswagen AG.
satelettronica

01 - Self diagnosis

1 - Self diagnosis

1.1 - Self diagnosis

1.2 - Function

The control unit (J179) for the automatic glow period is equipped with a fault memory.

If faults occur in the sensors and components being monitored, they will be stored in the fault memory together with an indication of the type of fault.

The faults stored can be read-out with the fault reader V.A.G 1551 or the vehicle system tester V.A.G 1552 => Page 3 .

The fault memory must be erased after the faults has been eliminated => Page 3 .

Faults which can be attributed to a temporary open circuit in the wiring or a loose contact, will also be stored. These faults will be displayed as sporadic faults "SP".

An electrical fault in the glow plug circuit is indicated during the extended glow period (approx. 3 minutes) by the glow period warning lamp flashing.

Note:

General information for self-diagnosis is in the fault reader V.A.G 1551 and the vehicle system tester V.A.G 1552 instruction manuals.

1.3 - Technical data of self diagnosis

Equipped with

- The data transfer between control unit and fault reader V.A.G 1551 or vehicle system tester V.A.G 1552 is carried out in the operating mode "Rapid data transfer".
- The fault memory is equipped with a non-volatile memory.

Selectable functions

Function	Ignition switched on	Engine idling
02 Interrogate fault memory	x	x
03 Final control diagnosis	x	x
05 Erase fault memory	x	x
06 End output	x	x
08 Read measured value block	x	x

Copyright by Volkswagen AG. Volkswagen AG does not guarantee or accept any liability with respect to the correctness of information in this document. Copyright by Volkswagen AG. Protected by copyright. Copying for private or commercial purposes, in part or in whole, is not permitted unless authorised by Volkswagen AG.
satelettronica

1.4 - Connecting fault reader V.A.G 1551 and selecting engine electronics control unit

Special tools, testers and auxiliary items

- Fault reader V.A.G 1551 with cable V.A.G 1551/3

Note:

The vehicle system tester V.A.G 1552 can be used instead of the fault reader V.A.G 1551, however a print-out is not possible.

Test conditions

- Battery voltage OK.

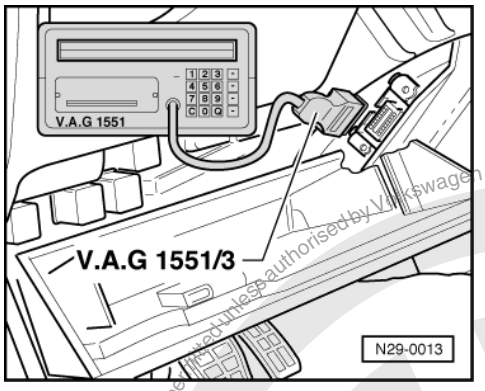

- Fuse 21 OK.
- Earth connections on engine and gearbox OK.

Work sequence

- -> Fold driver's side stowage compartment down.
- Connect fault reader V.A.G 1551 with cable V.A.G 1551/3.

-> Appears on display:

```
V.A.G - SELF DIAGNOSIS     HELP
     1 - Rapid data transmission*
     2 - Flash code output*
```

* Appears alternately

Note:

If the display remains blank:

=> Fault reader operating instructions

After the fault reader has been connected:

- Depending upon desired function:
  Switch ignition on
  or
  Start engine => Page 1 , Table "Selectable functions".
- Operate fault reader taking into account the information on the display:
- Press key 1 for "Rapid data transfer".
- Press keys 4 and 1 for address word "Diesel pump electronics" and confirm entry with Q key.

-> The fault reader V.A.G 1551 display will show the control unit identification, e.g.:

```
028906124B Saugdiesel      V02
Coding 00124     WSC0000
```

Protected by copyright. Copying for private or commercial purposes, in part or in whole, is not permitted unless authorised by Volkswagen AG. Volkswagen AG does not guarantee or accept any liability with respect to the correctness of information in this document. Copyright by Volkswagen AG.
satelettronica

- 028906124 = Part No. of the control unit (for up-to-date control unit versions see parts catalogue)
- Saugdiesel (naturally aspirated diesel) = engine version
- V01 = Control unit software version
- Coding: 127 without air conditioner, 124 with air conditioner
- WSC...Dealership number of the V.A.G dealer

- Press the ⇒key.

-> Indicated on display:

```
Rapid data transfer      HELP
Select function XX
```

- Further measures see repair procedures.

1.5 - Interrogating fault memory

Special tools, testers and auxiliary items

- Fault reader V.A.G 1551 with cable V.A.G 1551/3

Note:

The vehicle system tester V.A.G 1552 can be used instead of the fault reader V.A.G 1551, however a print-out is not possible.

Work sequence

- Connect fault reader V.A.G 1551 (V.A.G 1552) and with the "Address word" 41 select the Diesel pump electronics control unit. When doing this the engine should be idling.
  (Connecting fault reader and selecting engine electronics control unit => Page 2 .)

Only when engine does not start:

- Switch ignition on.

- Switch on fault reader printer with the print key. The warning lamp in key must light up.

-> Indicated on display:

```
Rapid data transfer      HELP
Select function XX
```

- Operate fault reader taking into account the information on the display:
- Press keys 0 and 2 for function "Interrogate fault memory" and confirm entry with Q key.

-> The number of faults stored or "No fault recognised!" will be shown on the display.

```
X Faults recognised!
```

If one or more faults are stored:

The stored faults will be displayed and printed out one after the other.

-> After the stored faults have been printed out, the display will show:

```
Rapid data transfer      HELP
Select function XX
```

- Eliminate the printed out faults using the appropriate fault table.
  => Page 4 .
- Afterwards erase fault memory => Page 6

Protected by copyright. Copyright by Volkswagen AG.
Copyright by Volkswagen AG. Volkswagen AG does not guarantee or accept any liability with respect to the correctness of information in this document. Copyright by Volkswagen AG. Reproduction, in whole or in part, for commercial purposes, is not permitted unless authorised by Volkswagen AG.
satelettronica

If no fault is stored:

- Press the ⇒key.

-> Indicated on display:

```
Rapid data transfer      HELP
Select function XX
```

- Press keys 0 and 6 for the "End data transfer" function and confirm input with the Q key.

Note:

If the self-diagnosis has not detected a fault, use the appropriate fault table in "Fault finding engine" binder for further fault finding.

1.6 - Fault table

Notes:

- The fault tables are listed according to the 5 digit fault code on the left.
- Explanation of the fault types (e.g. "open circuit/short circuit to earth"):

=> Fault reader operating instructions

- If components are indicated as faulty:
  First check the wiring and connectors to these components as well as the system earth connections according to current flow diagram. This is particularly relevant if faults are output as "occurring sporadically" (SP).

V.A.G 1551 print-out	Possible causes of fault	Possible effects	Fault remedy
00626 Glow period warning lamp -K29 Short to positive	- Wiring short to positive - Warning lamp defective	- Warning lamp does not light during glow period	- Check K29, => Page 7 , final control diagnosis

V.A.G 1551 print-out	Possible causes of fault	Possible effects	Fault remedy
01050 Glow plug monitor			
Open circuit/short to earth	- Wiring open circuit or short to earth - Fuse -S125- defective - Relay contact open	- Poor cold starting - Glow period warning lamp (K29) flashes	- Check wiring and connections according to current flow diagram. Replace fuse if necessary. Replace glow plugs if necessary.
Short to positive	- Wiring short to positive - Relay does not switch off	- Always pre-glows	- Check wiring and connections according to current flow diagram.

V.A.G 1551 print-out	Possible causes of fault	Possible effects	Fault remedy
01167 Full throttle stop valve - N194 Open circuit/short to positive	- Wiring open circuit or short to positive - N194 defective	- Slightly reduced performance	- Check N194 => Page 7 , final control diagnosis

satelettronica

V.A.G 1551 print-out	Possible causes of fault	Possible effects	Fault remedy
Short to earth	- Wiring short to earth - N194 defective	- Black exhaust smoke at altitudes above 1000 metres	
01168 Idling speed boost valve - N177 Short to positive	- Wiring short to positive - N177 defective	- Idling speed too high when engine warm	- Check N177, => Page 7 , final control diagnosis
Open circuit/short to earth	- Wiring open circuit - N177 defective	- Idling speed too high when engine warm	
	- Wiring short to earth	- Idling speed too low when engine cold	

V.A.G 1551 print-out	Possible causes of fault	Possible effects	Fault remedy
01169 Door contact switch driver's side -F2 Open circuit/short to positive	- Wiring open circuit or short to positive - F2 defective	- Glow period system will not activate by opening and closing the driver's door	- Check wiring and connections according to current flow diagram. - Renew F2 if necessary.
Short to earth	- Wiring short to earth - F2 defective		
01170 Injection period sender - G175 Short to earth	-Wiring short to earth	- Automatic glow period control unit (J179) switches to emergency function	- Check wiring and connections according to current flow diagram. - Renew G175 if necessary.
No signal	- Wiring open circuit or short to earth - G175 defective		

V.A.G 1551 print-out	Possible causes of fault	Possible effects	Fault remedy
01180 Engine / ACC electrical connection Short to positive	- Wiring short to positive		- Check wiring and connections according to current flow diagram.
01204 Engine temperature sender - G27- Short to earth	- Wiring short to earth - G27 defective	- No pre-glow - No idling speed increase when engine cold	- Check G27 =>Page 33
Open circuit/short to positive	- Wiring open circuit or short to positive - G27 defective	- Always pre-glows	

V.A.G 1551 print-out	Possible causes of fault	Possible effects	Fault remedy
01265 Exhaust gas recirculation valve -N18- Short to positive	- Wiring short to positive - N18 defective	- No exhaust gas recirculation - Increased emissions	- Check N18, => Page 7 , final control diagnosis

Copyright by Volkswagen AG. Volkswagen AG does not guarantee or accept any liability with respect to the correctness of information in this repair manual, whole or in part, is not permitted without prior consent of Volkswagen AG. Reproduction for private or commercial purposes, in part or in whole, is not permitted without the express authorisation of Volkswagen AG.
satelettronica

V.A.G 1551 print-out	Possible causes of fault	Possible effects	Fault remedy
Open circuit/short to earth	- Wiring open circuit - N18 defective		
	- Wiring short to earth	- Exhaust gas always recirculating - Black exhaust smoke - Increased emissions - Slightly reduced performance	

V.A.G 1551 print-out	Possible causes of fault	Possible effects	Fault remedy
01266 Glow plug relay -J52 Short to positive	- Wiring short to positive - J52 defective	- No glow period - Poor cold starting - Glow period warning lamp (K29) flashes	- Check J52 =>Page 7 , final control diagnosis
Open circuit/short to earth	- Wiring open circuit or short to earth - J52 defective		

V.A.G 1551 print-out	Possible causes of fault	Possible effects	Fault remedy
01269 Commencement of injection valve -N108			
Open circuit/short to positive	- Wiring open circuit or short to positive - N108 defective	- Coarse engine running or diesel knock when engine warm	- Check N108, => Page 7 , final control diagnosis
Short to earth	- Wiring short to earth - N108 defective	- Misfiring and/or blue smoke when engine is cold	

1.7 - Erasing fault memory

Special tools, testers and auxiliary items

- Fault reader V.A.G 1551 or vehicle system tester V.A.G 1552 with cable V.A.G 1551/3

Test conditions

- Fault eliminated

Note:

After eliminating faults the fault memory must be interrogated again as follows and then erased.

Work sequence

- Connect fault reader V.A.G 1551 (V.A.G 1552) and with the "Address word" 41 select the Diesel pump electronics control unit. When doing this the engine should be idling.
  (Connecting fault reader and selecting engine electronics control unit => Page 2 .)

-> Indicated on display:

```
Rapid data transfer      HELP
Select function XX
```

- Press keys 0 and 2 for function "Interrogate fault memory" and confirm entry with Q key.

```
Rapid data transfer      HELP
Select function XX
```

satelettronica

-> Press ⇒key until all faults still stored have appeared and the display reads:
- Press keys 0 and 5 for the function "Erase fault memory" and confirm entry with Q key.

-> Indicated on display:

```
Rapid data transfer
Fault memory is erased!
```

- If the fault memory will not erase there is a fault still in the system and this must be rectified.
- Press the ⇒key.

-> Indicated on display:

```
Rapid data transfer     HELP
Select function XX
```

- Press keys 0 and 6 for the "End data transfer" function and confirm input with the Q key.
- Carry out a road test and interrogate fault memory again. No faults must be displayed.

1.8 - Final control diagnosis

Special tools, testers and auxiliary items

- Fault reader V.A.G 1551 or vehicle system tester V.A.G 1552 with cable V.A.G 1551/3
- Diode test lamp V.A.G 1527
- Adapter set V.A.G 1594
- Current flow diagram

The final control diagnosis activates the following components in the stated sequence:

1. Exhaust gas recirculation valve (N18)

2. Idling speed boost valve (N177)
   (only with air conditioner)

3. Glow period warning lamp (K29)

4. Glow plug relay (J52)

5. Full throttle stop valve (N194)

6. Engine/air conditioner compressor electrical connection
   (not relevant)

7. Commencement of injection valve (N108)

Notes:

- The final control diagnosis can be carried out with the engine stationary or running. As the clicking of the valves when being activated can be heard better with the engine stationary. it should be carried out with the engine stationary.
- The ignition must be switched off before repeating the final control diagnosis.

Work sequence

- Connect the fault reader V.A.G 1551 (V.A.G 1552) and with ignition switched on select Diesel pump electronics control unit using the "Address word" 41.
  (Connecting fault reader and selecting engine electronics control unit => Page 2 .)

-> Indicated on display:

```
Rapid data transfer     HELP
Select function XX
```

Protected by copyright. Copying for private or commercial purposes, in part or in whole, is not permitted unless authorised by Volkswagen AG. Volkswagen AG does not guarantee or accept any liability with respect to the correctness of information in this document. Copyright by Volkswagen AG.
satelettronica

- Operate fault reader taking into account the information on the display:
- Press keys 0 and 3 for the function "Final control diagnosis".

-> Indicated on display:

```
Rapid data transfer     Q
03 Final control diagnosis
```

- Confirm input with Q key.

-> Indicated on display:

```
Final control diagnosis
Exhaust gas recirculation valve -N18
```

The valve will be activated and must click once.

- Press the ⇒key.

-> Indicated on display:

```
Final control diagnosis
Exhaust gas recirculation valve -N18
```

Valve activation will be switched off and the valve must again click once.

Valve does not click:

- Check exhaust gas recirculation:

=> Repair group 26; Exhaust gas recirculation system; Checking exhaust gas recirculation Exhaust gas recirculation system Checking exhaust gas recirculation

- Press the ⇒key.

-> Indicated on display:

```
Final control diagnosis
Idling speed boost valve -N177
```

The valve will be activated and must click once.

- Press the ⇒key.

-> Indicated on display:

```
Final control diagnosis
Idling speed boost valve -N177
```

Valve activation will be switched off and the valve must again click once.

Valve does not click:

- Check wiring and connections according to current flow diagram.
- Check idling speed boost valve => Page 34
- Press the ⇒key.

-> Indicated on display:

```
Final control diagnosis
Glow period warning lamp -K29
```

The warning lamp must light up.

Warning lamp does not light up:

- Check glow period warning lamp:

Protected by copyright. Copying for private or commercial purposes, in part or in whole, is not permitted unless authorised by Volkswagen AG. Volkswagen AG does not guarantee or accept any liability with respect to the correctness of information in this document. Copyright by Volkswagen AG.

sateletronica

=> Current flow diagrams, Electrical fault finding and Fitting locations binder

- Press the ⇒key.

-> Indicated on display:

```
Final control diagnosis
Glow period warning lamp -K29
```

The warning lamp must go out.

- Press the ⇒key.

-> Indicated on display:

```
Final control diagnosis
Glow plug relay -J52
```

The glow period is switched on and the relay must click once

- As a check the diode test lamp V.A.G 1527can be connected to the glow plug feed wire.
  LED must light up.
- Press the ⇒key.

-> Indicated on display:

```
Final control diagnosis
Glow plug relay -J52
```

The glow period is switched off and the relay must again click once or LED must go out.

If the relay does not click:

- Check glow plug system:

=> Current flow diagrams, Electrical fault finding and Fitting locations binder

- Press the ⇒key.

-> Indicated on display:

```
Final control diagnosis
Full throttle stop valve -N194
```

The valve will be activated.

- As a check the diode test lamp V.A.G 1527can be connected to the full throttle stop valve feed wire.
  LED must light up.
- Press the ⇒key.

-> Indicated on display:

```
Final control diagnosis
Full throttle stop valve -N194
```

Valve activation is switched off and the LED must go out.

If LED does not light up:

- Check wiring and connections according to current flow diagram.
- Check full throttle stop valve => Page 34
- Press the ⇒key.

-> Indicated on display:

```
Final control diagnosis
Engine/ACC electrical connection
```

Protected by copyright. Copyright by Volkswagen AG.
Copyright by Volkswagen AG. Volkswagen AG does not guarantee or accept any liability with respect to the correctness of information in this document.
Copying for private or commercial purposes, in part or in whole, is not permitted unless authorised by Volkswagen AG.
satelettronica

The test step is also recalled on vehicles without air conditioner system.

- Press the ⇒key.

-> Indicated on display:

```
Final control diagnosis
Engine/ACC electrical connection
```

- Press the ⇒key.

-> Indicated on display:

```
Final control diagnosis
Commencement of injection valve -N108
```

The valve will be activated and must click once.

- Press the ⇒key.

-> Indicated on display:

```
Final control diagnosis
End output
```

Valve activation is switched off and the valve must again click once.

Valve does not click:

- Check wiring and connections according to current flow diagram.
- Check commencement of injection valve => Page 32 .
- Press the ⇒key.

-> Indicated on display:

```
Function is not known
or cannot be performed at the moment
```

- Press the ⇒key.

-> Indicated on display:

```
Rapid data transfer      HELP
Select function XX
```

- Press keys 0 and 6 for the "End data transfer" function and confirm input with the Q key.
- Switch off ignition.

1.9 - Reading measured value block

Currently only display group 01 can be read in the measured value block, for the following values:

	Display zones			
	1	2	3	4
Display group 01				
Display	xxxx rpm	xx.x ms	xxx.x %	xx.x mm3
Indicated	Engine speed	Injection period	Commencement of injection valve switched-on period	Quantity injected

Protected by copyright. Copying for private or commercial purposes, in part or in whole, is not permitted unless authorised by Volkswagen AG. Volkswagen AG does not guarantee or accept any liability with respect to the correctness of information in this document. Copyright by Volkswagen AG.
satelettronica

Special tools, testers and auxiliary items

- Fault reader V.A.G 1551 or vehicle system tester V.A.G 1552 with cable V.A.G 1551/3

Test conditions

- Engine oil temperature min. 80 °C
- All electrical consumers switched off.

Work sequence

- Connect fault reader V.A.G 1551 (V.A.G 1552) and with the "Address word" 41 select the Diesel pump electronics control unit. When doing this the engine should be idling.
  (Connecting fault reader and selecting engine electronics control unit => Page 2 .)

-> Indicated on display:

```
Rapid data transfer      HELP
Select function XX
```

- Press keys 0 and 8 for the function "Read measured value block" and confirm entry with Q key.

-> Indicated on display:

```
Read measured value block      HELP
Input display group number XX
```

- Press keys 0 and 1 for "Display group number 01" and confirm entry with Q key.

-> Indicated on display

```
Read measured value block 1
930 rpm     -     37.0 %     5
```

- Read off idling speed in display zone 1.
  Specification: 900± 30 rpm
- Disregard injection period in display zone 2 (no specification).
- Read off commencement of injection valve switched-on period in display zone 3.
  Specification: 10...90%
- Read off quantity injected in display zone 4.
  Specification: 1...14
- If the specifications in display zone 3 and 4 are not attained, replace injection period sender (G175) => Page 19 .

Protected by copyright. Copying for private or commercial purposes, in part or in whole, is not permitted unless authorised by Volkswagen AG. Volkswagen AG does not guarantee or accept any liability with respect to the correctness of information in this document. Copyright by Volkswagen AG.

satelettronica

23 - Mixture preparation, Injection

Protected by copyright. Copying for private or commercial purposes, in part or in whole, is not permitted unless authorised by Volkswagen AG. Volkswagen AG does not guarantee or accept any liability with respect to the correctness of information in this document. Copyright by Volkswagen AG.

1 - Servicing fuel injection system

1.1 - Servicing fuel injection system

Notes:

- The control unit for the automatic glow period (J179) is equipped with a fault memory. Before carrying out repairs and fault finding the fault memory must be interrogated and final control diagnosis performed
- During some checks it can happen that the control unit will recognise and store a fault. Therefore after completing all checks and repairs the fault memory must be interrogated and if necessary erased.
  => Page 3 , interrogating fault memory
- Always renew spring-type hose clips with screw-type hose clips.
- Always renew seals and gaskets.

Safety precautions =>Page 12

Rules for cleanliness => Page 12

Checking fuel system for leaks => Page 21

1.2 - Safety precautions

To prevent injuries to persons and/or damage to the injection and glow plug system, the following must be noted:

- The ignition must be switched off before connecting or disconnecting injection or glow plug system wiring or tester cables.
- Before disconnecting battery, obtain radio code for radios fitted with anti-theft coding.
- Disconnecting and connecting the battery must only be undertaken when the ignition is switched off otherwise the automatic glow period control unit may be damaged.

1.3 - Rules for cleanliness

When working on the fuel supply/injection system, pay careful attention to the following "5 rules":

- Thoroughly clean all unions and the adjacent areas before disconnecting.
- Place parts that have been removed on a clean surface and cover. Do not use fluffy cloths!
- Carefully cover opened components or seal, if the repair cannot be carried out immediately.
- Only install clean components:
  Only unpack replacement parts immediately prior to installation.
  Do not use parts that have been stored loose (e.g. in tool boxes etc.).
- When the system is open:
  Do not work with compressed air if this can be avoided.
  Do not move vehicle unless absolutely necessary.
- Also ensure that no Diesel fuel runs onto the coolant hoses. If necessary hoses must be cleaned immediately. Affected hoses must be replaced.

satelettronica

1.4 - Fitting locations overview

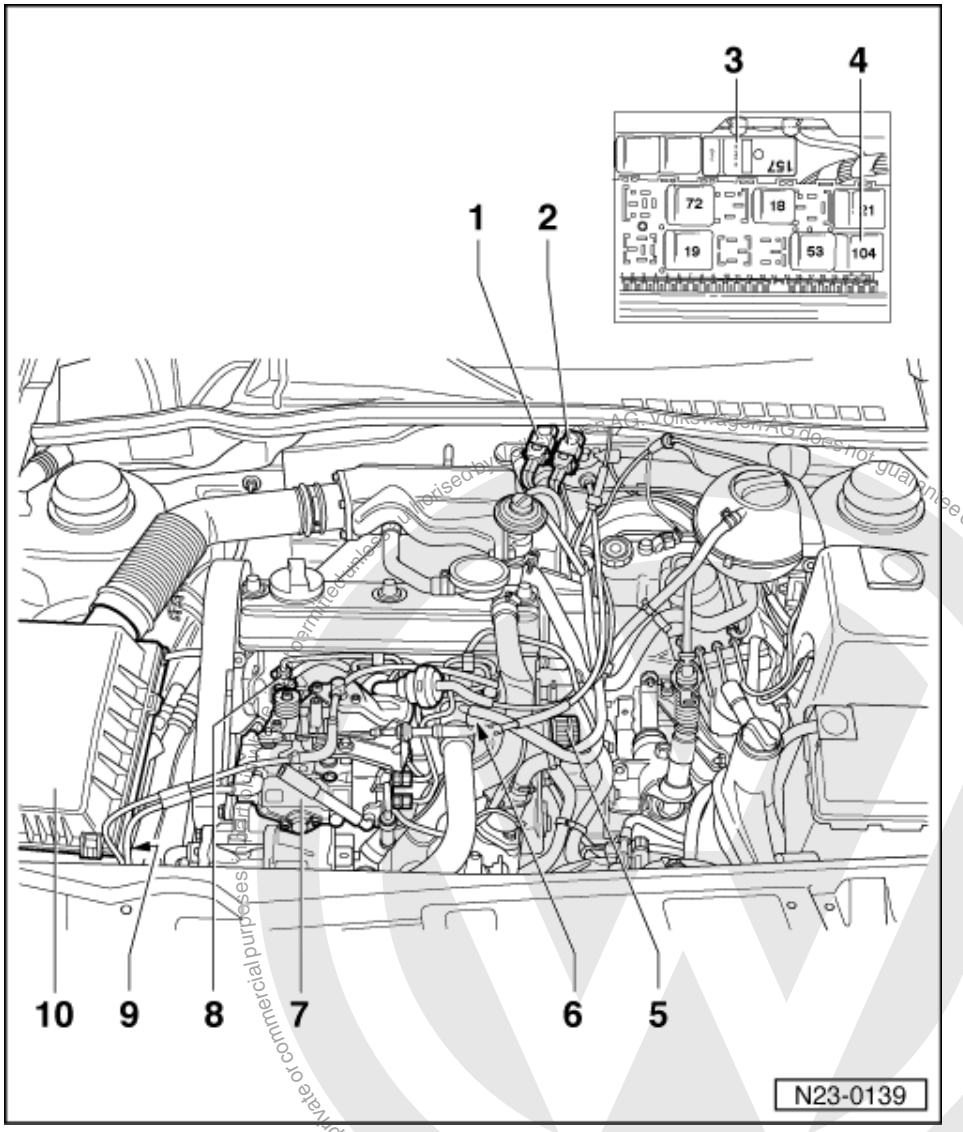

1 Exhaust gas recirculation valve (N18)
- Activated charcoal filter system

=> Repair group 26; Exhaust gas recirculation system Exhaust gas recirculation system

2 Idling speed boost valve (N177)
- On vehicles with air conditioner

3 Automatic glow period control unit (J179)
- Location: above relay plate

4 Glow plug relay (J52)
- Location: on relay plate

5 Multi-pin connector

Protected by copyright. Copying for private or commercial purposes, in part or in whole, is not permitted unless authorised by Volkswagen AG. Volkswagen AG does not guarantee or accept any liability with respect to the correctness of information in this document. Copyright by Volkswagen AG.
satelettronica

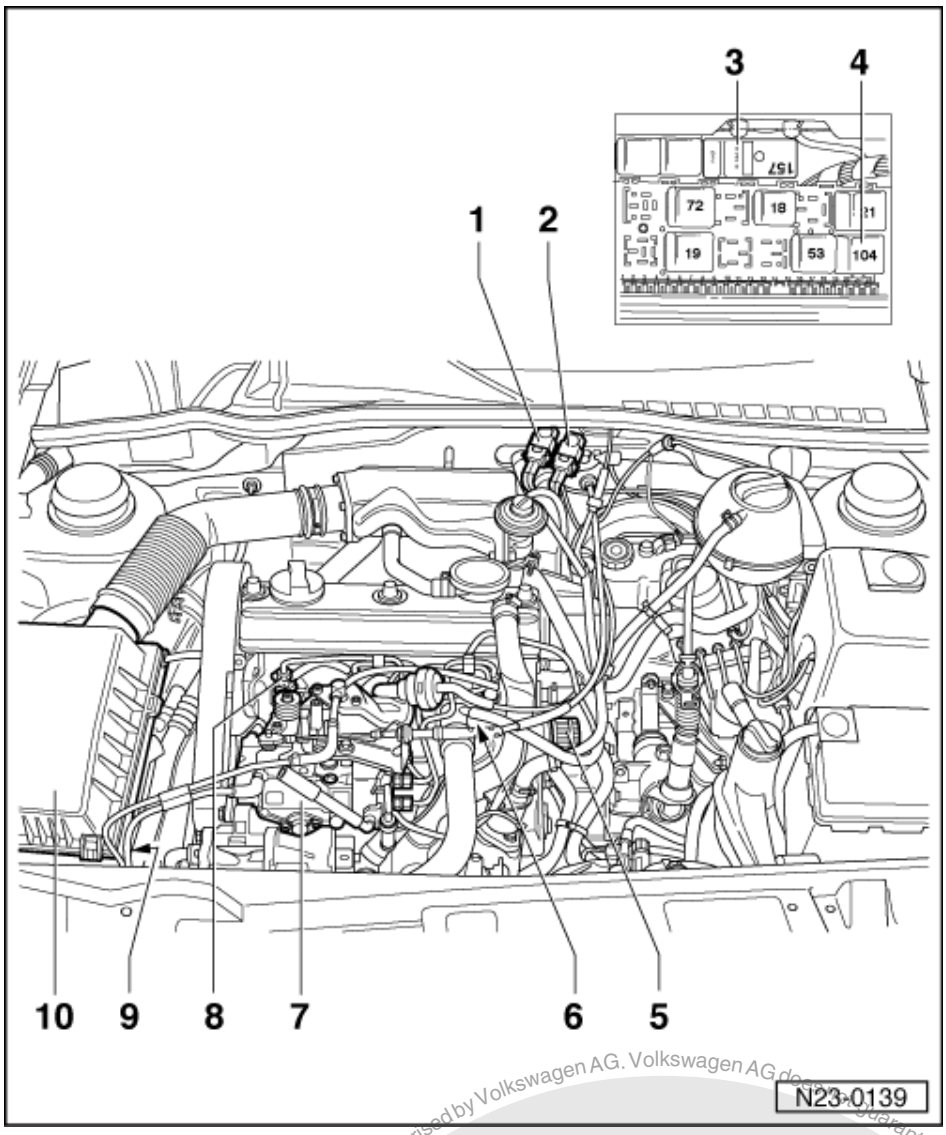

6 Engine temperature sender (G27)
- With coolant temperature gauge sender (G2)

7 Injection pump
- Attaching components => Page 15

8 Injector

9 Fuel filter
- Location: in front right wheel housing

10 Air cleaner

Protected by copyright. Copying for private or commercial purposes, in part or in whole, is not permitted unless authorised by Volkswagen AG. Volkswagen AG does not guarantee or accept any liability with respect to the correctness of information in this document. Copyright by Volkswagen AG.

satelettronica

1.5 - Servicing injection pump

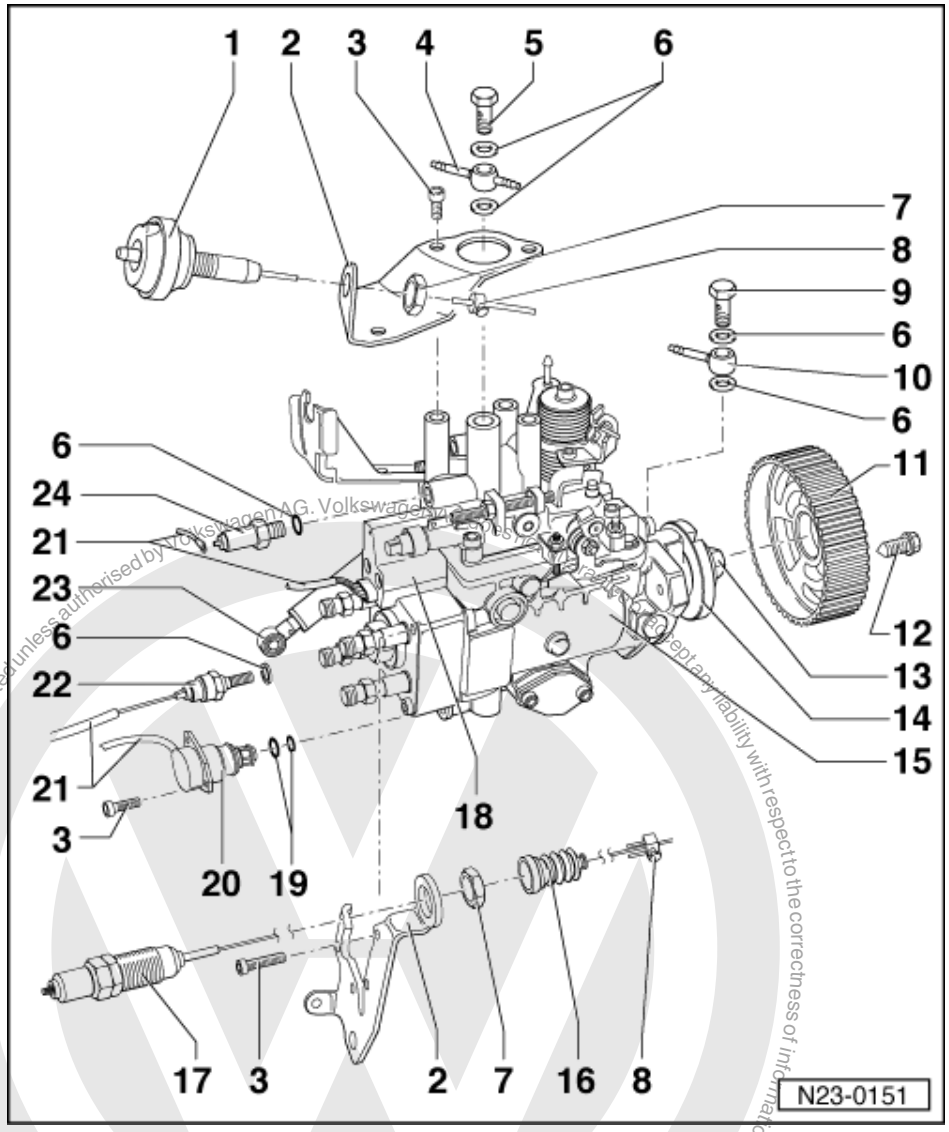

- Observe rules for cleanliness
  =>Page 12

1 **Idling speed boost actuator**
  - Pneumatic for vehicles with air conditioner
  - Adjusting => Page 32

2 **Bracket**

3 **10 Nm**

4 **Return pipe**
  - To control valve/fuel filter

5 **Banjo bolt, 25 Nm**
  - Is marked with "OUT"

6 **Oil seal**
  - Renew

Protected by copyright. Copyright by Volkswagen AG. Volkswagen AG does not guarantee or accept any liability with respect to the correctness of information in this document. Copying for private or commercial purposes, in part or in whole, is not permitted unless authorised by Volkswagen AG.
satelettronica

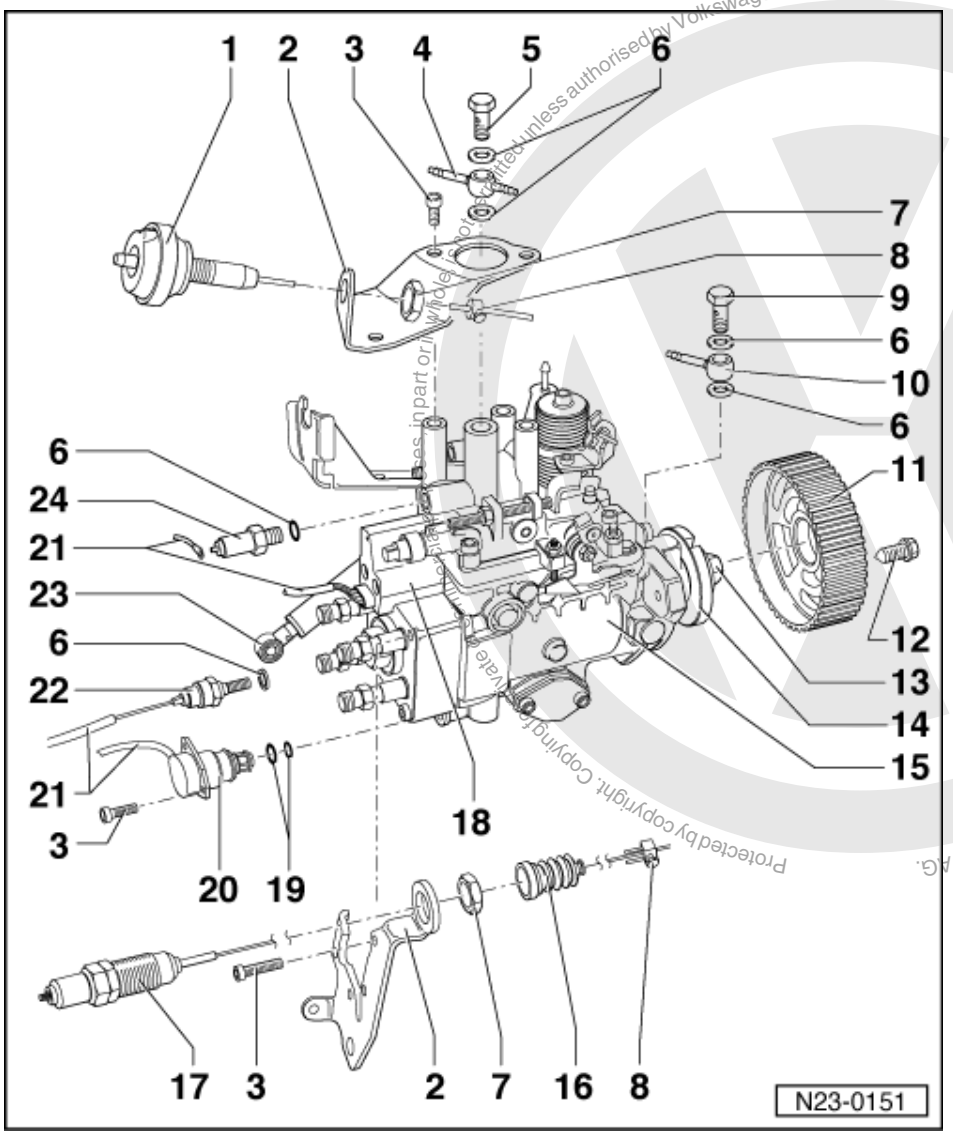

7 20 Nm
8 Clamping piece
9 Banjo bolt, 25 Nm
10 Supply pipe
- From fuel filter

11 Injection pump sprocket
- Two part

12 25 Nm
13 Nut
- For hub, item 14
- Do not loosen. Otherwise the injection pump basic setting may be altered and this cannot be reset with normal workshop equipment

14 Hub

Protected by copyright. Copyright by Volkswagen AG. Volkswagen AG does not guarantee or accept any liability with respect to the correctness of information in this document. Copyright by Volkswagen AG.
satelettronica

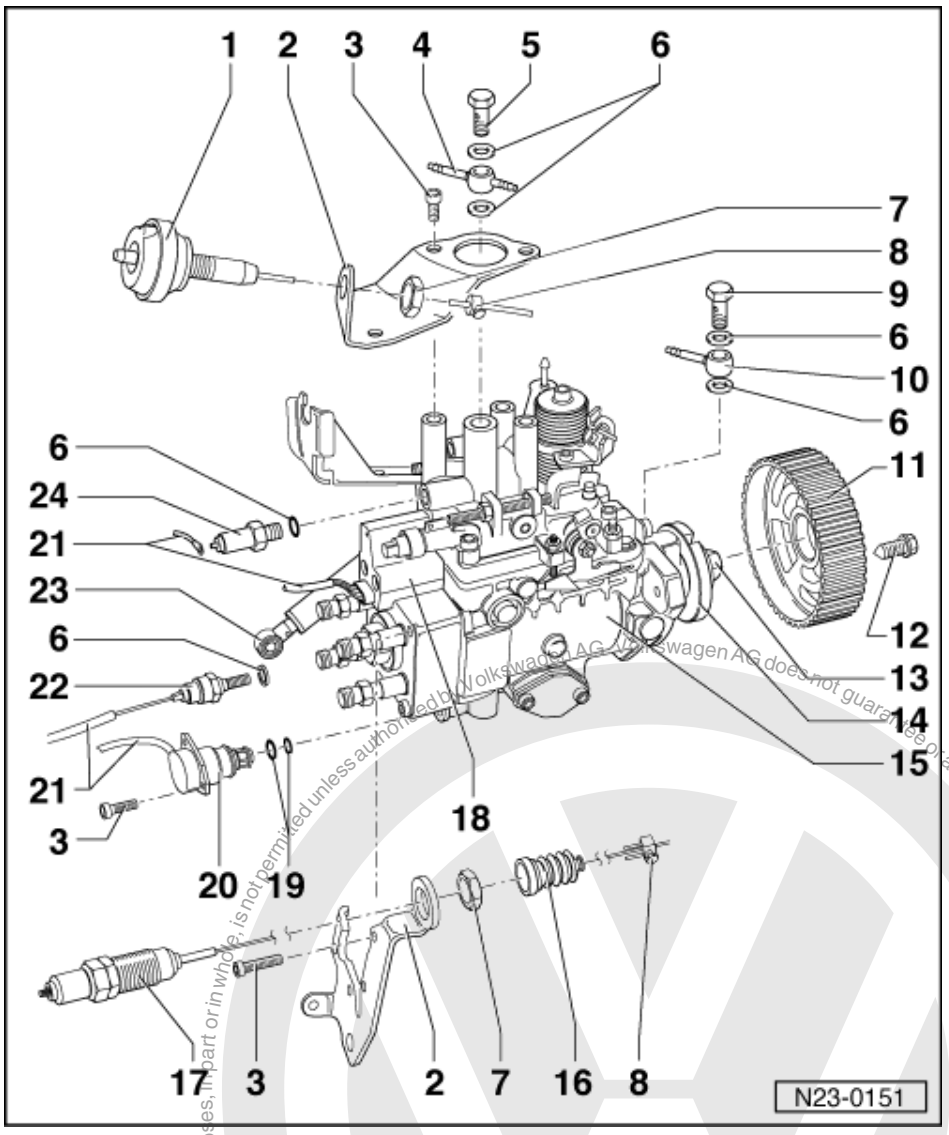

15 Injection pump

- Checking commencement of injection and adjusting =>Page 27
- Removing and installing
  =>Page 22
- Fill with Diesel before installing
- On replacement, the injection pump must be matched to the electronic immobilizer

=> Electrical system; Repair group 01; Immobilizer self-diagnosis; Matching fuel cut-off valve control unit to immobilizer control unit Immobilizer self-diagnosis Matching fuel cut-off valve control unit to immobilizer control unit

16 Protective cap

17 Idling speed boost actuator (N123)

- Electric for vehicles without air conditioner
- Adjusting => Page 32

satelettronica

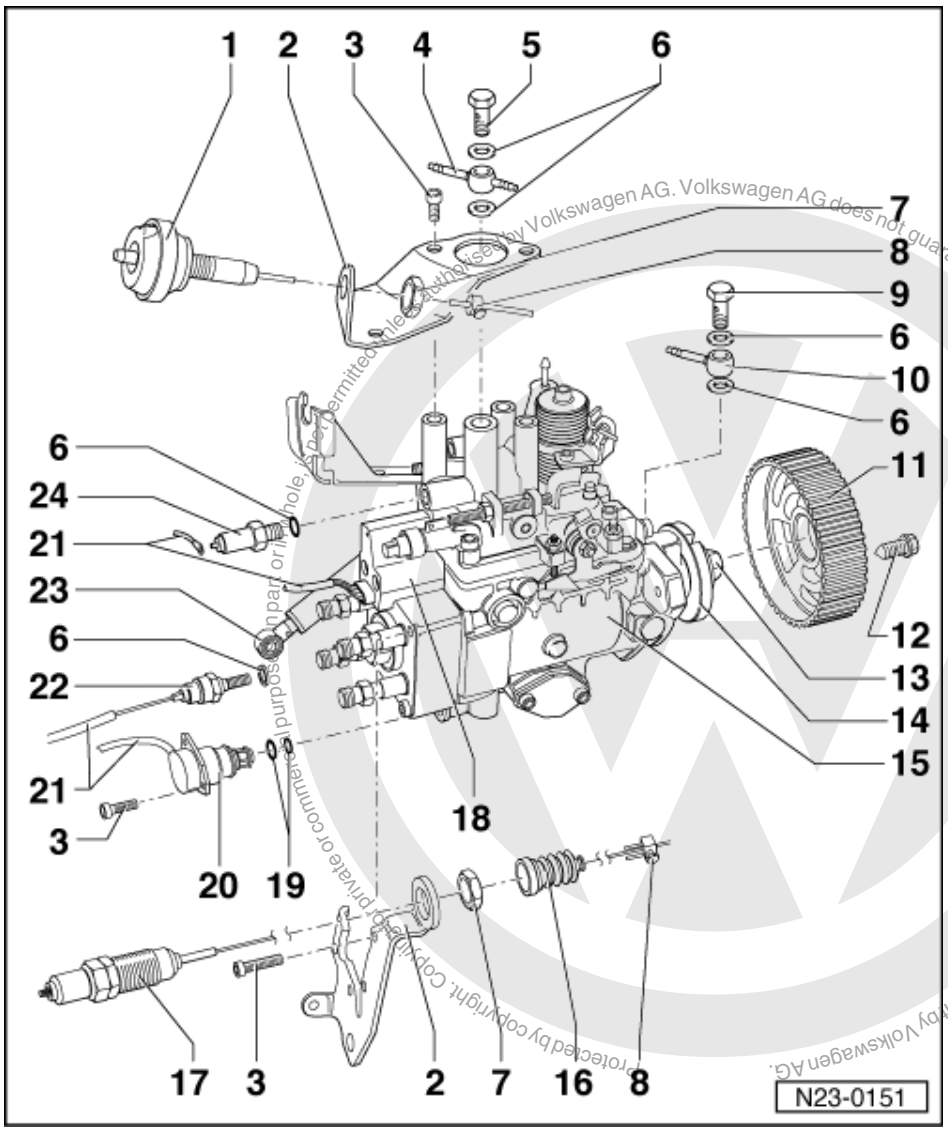

18 Fuel cut-off valve control unit (J366)

- Checked by immobilizer control unit:

=> Electrical system; Repair group 01; Immobilizer self-diagnosis; Performing immobilizer self-diagnosis Immobilizer self-diagnosis Performing immobilizer self-diagnosis

19 O ring

20 Commencement of injection valve (N108)

- Checking =>Page 7 , final control diagnosis

21 Electrical wiring

- Removing from multi-pin connector => Page 25
- Multi-pin connector assignment:

=> Current flow diagrams, Electrical fault finding and Fitting locations

satelettronica

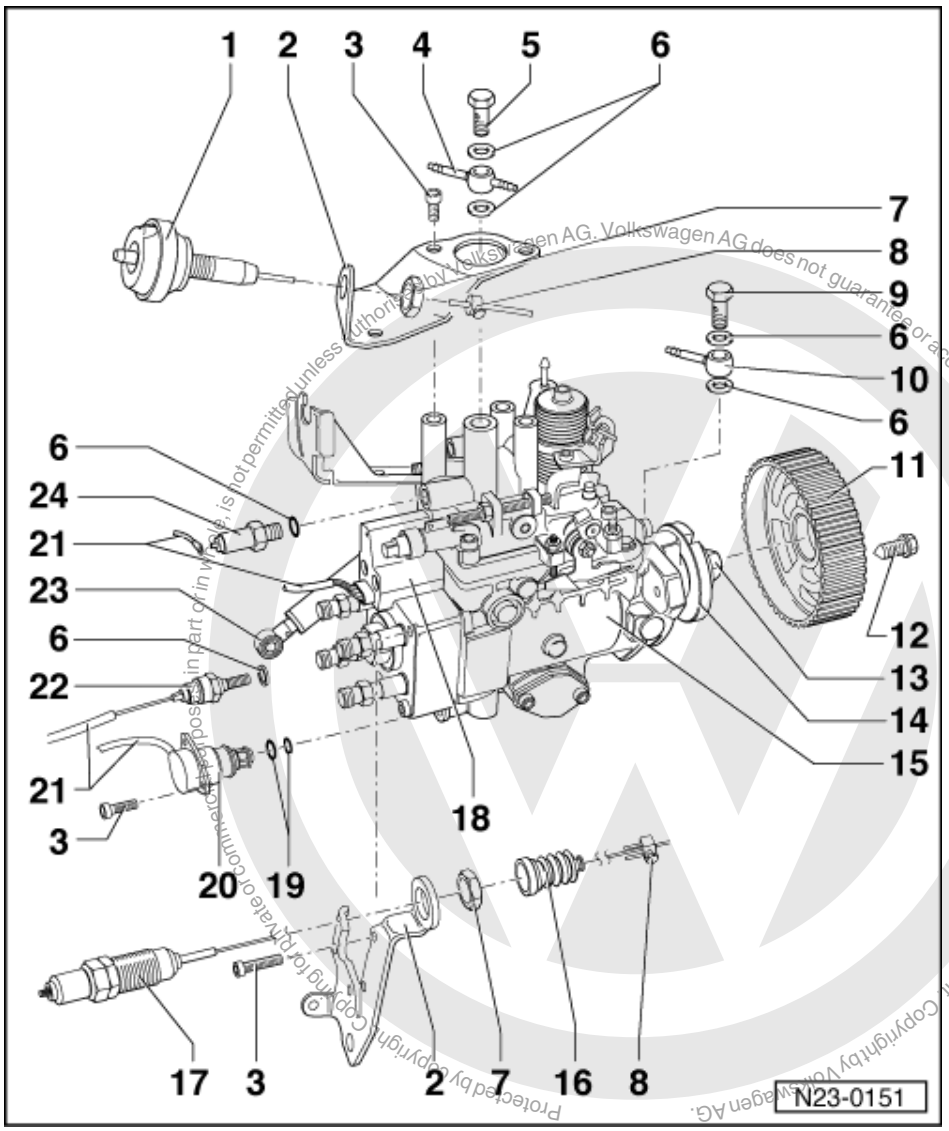

22 Injection period sender (G175)

- Tighten to 25 Nm

23 Shock absorber

24 Full throttle stop valve (N194)

- Checking =>Page 7 , final control diagnosis

Protected by copyright. Copying for private or commercial purposes, in part or in whole, is not permitted unless authorised by Volkswagen AG. Volkswagen AG does not guarantee or accept any liability with respect to the correctness of information in this document. Copyright by Volkswagen AG.
satelettronica

1.6 - Servicing fuel filter

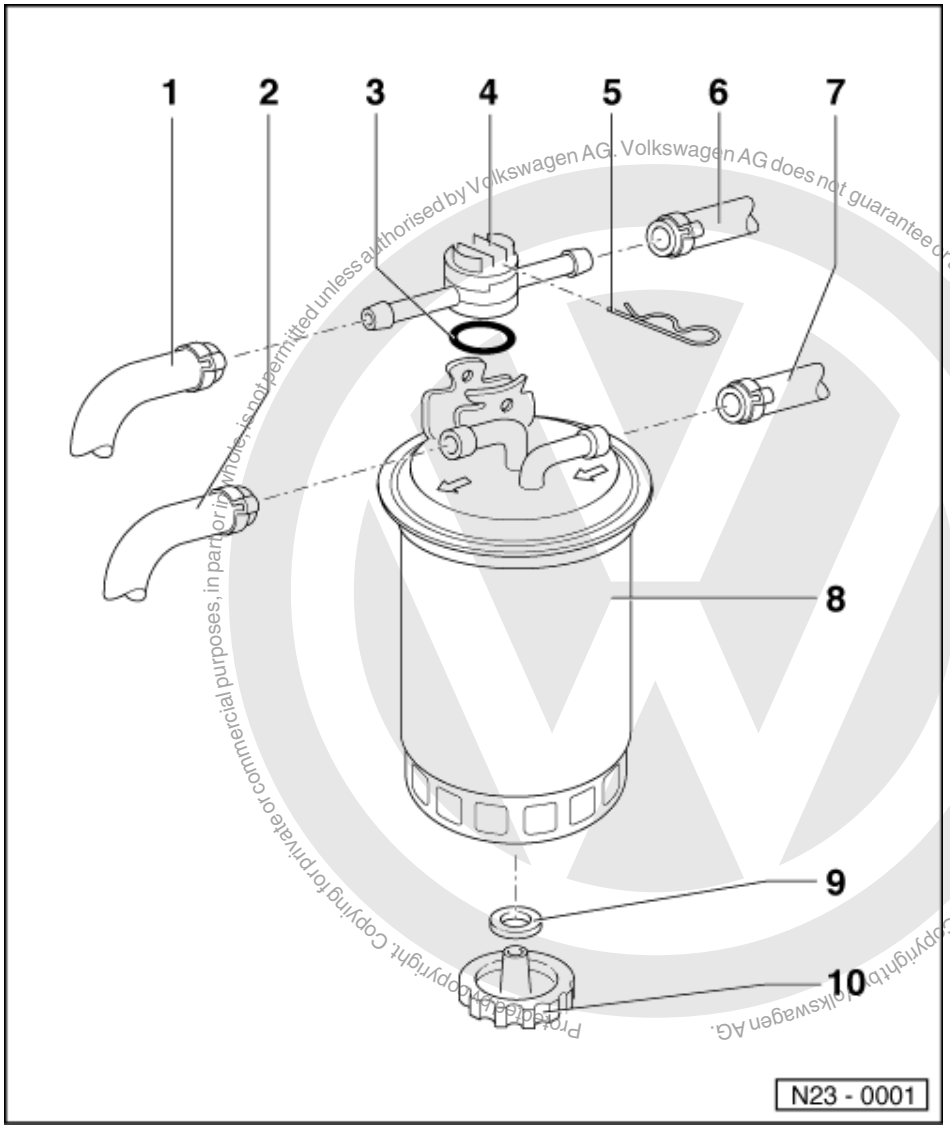

Protected by copyright. Copying for private or commercial purposes, in part or in whole, is not permitted unless authorised by Volkswagen AG. Volkswagen AG does not guarantee or accept any liability with respect to the correctness of information in this document. Copyright by Volkswagen AG.

satelettronica

1 Return pipe
- From injection pump

2 Supply pipe
- To injection pump

3 O-Ring
- Renew

4 Control valve
- Installation position: arrow points towards fuel tank
- When changing filter, remove securing clip and take control valve off complete with fuel pipes
- Below + 15 °C:
  Passageway to filter open
- Over + 31 °C:
  Passageway to filter closed

5 Securing clip

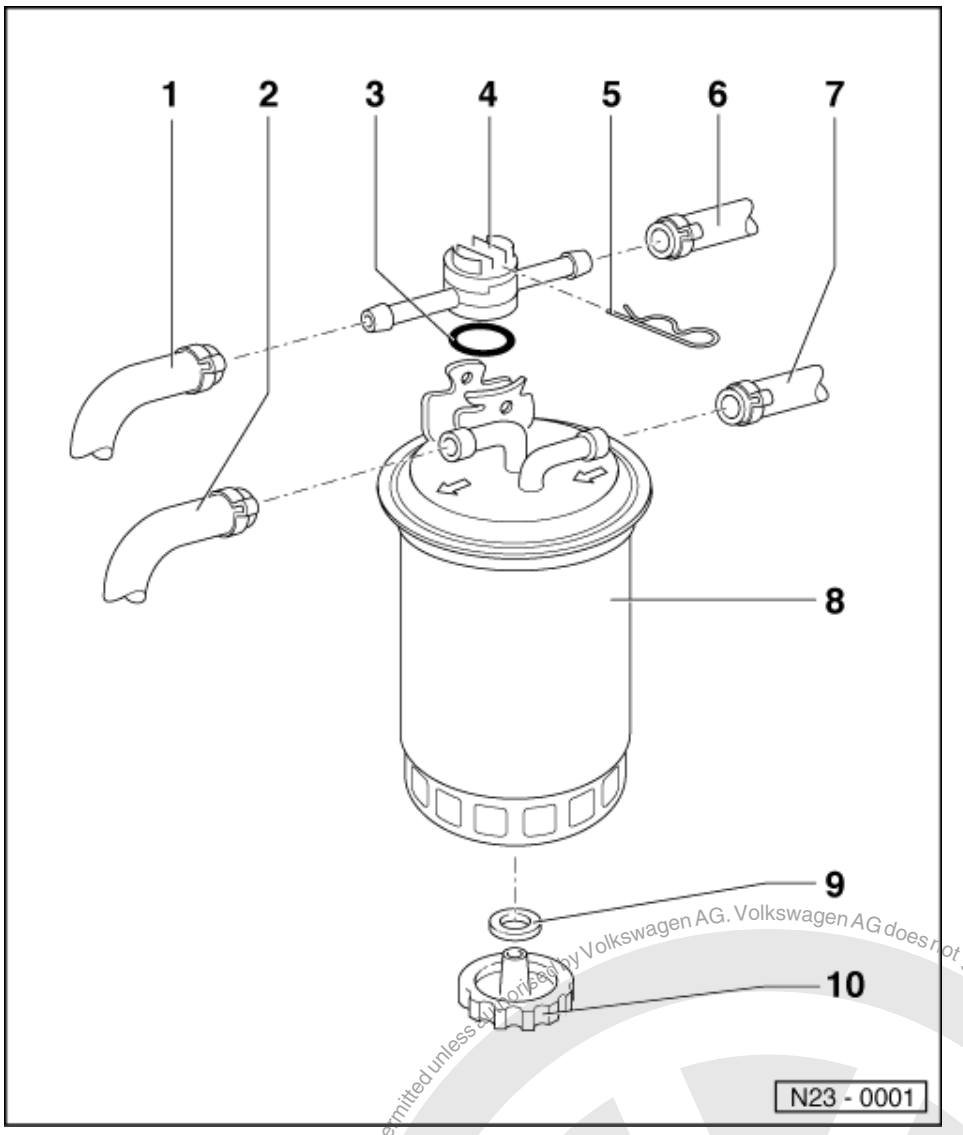

6 Return pipe
- To fuel tank

7 Supply pipe
- From fuel tank

8 Fuel filter
- Location: in front right wheel housing
- Fill with diesel before installing
- Flow direction is marked by an arrow
- Do not interchange connections

9 Gasket
- Renew if damaged

10 Water drain plug
- To bleed remove securing clip and take control valve off complete with fuel pipes attached
- Loosen and allow approx. 100 cm3 fluid to drain

1.7 - Checking fuel system for leaks

Special tools, testers and auxiliary items
- Hand pump V.A.G 1274
- Adapter V.A.G 1274/1 A

Protected by copyright. Copying for private or commercial purposes, in part or in whole, is not permitted unless authorised by Volkswagen AG. Volkswagen AG does not guarantee or accept any liability with respect to the correctness of information in this document. Copyright by Volkswagen AG.
satelettronica

- Adapter V.A.G 1274/2
- Hose clip

Test sequence

- Run engine at idling speed and open the throttle several times to remove any air which may be in the system.

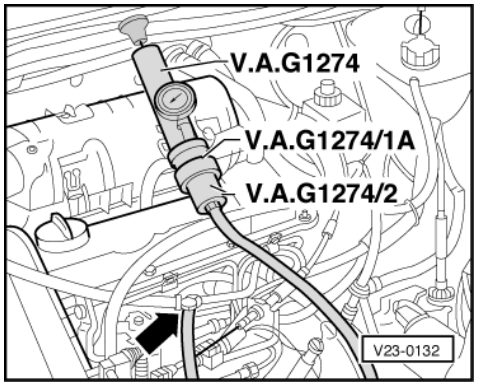

- Disconnect return pipe from injection pump.
- -> Secure adapter pipe to the injection pump in place of the return pipe.
- Clamp-off supply pipe at fuel tank with a hose clamp.

- Using tester hand pump build-up a pressure of
  1.0 ... 1.5 bar.
  It may be necessary to pump up the system several times because of air which may be in the system.
- If the pressure constantly drops, locate leak and eliminate fault.

Notes:

- The fault can be localised by repositioning the hose clamp, e.g. to in front of the fuel filter.
- The return pipe can be pressurized by connecting the adapter to the injector supply pipe. Then the return and supply pipes at the fuel tank as well as the supply pipe at the fuel filter outlet must be disconnected.

1.8 - Removing and installing injection pump

Special tools, testers and auxiliary items

- Setting bar 2065 A
- Pin wrench Matra V159
- Ring spanner 3035
- Pin 3359
- Torque wrench V.A.G 1331 (5...50 Nm)
- Spade terminal release tool

With engine removed:

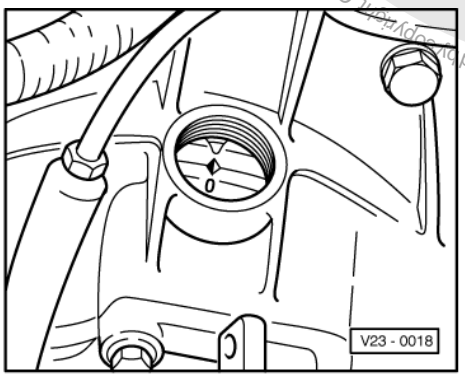

Protected by copyright. Copying for private or commercial purposes, in part or in whole, is not permitted unless authorised by Volkswagen AG. Volkswagen AG does not guarantee or accept any liability with respect to the correctness of information in this document. Copyright by Volkswagen AG.
satelettronica

- Adjusting device 2068 A

Removing
- Remove intake hose between air cleaner and intake manifold.
- Remove upper toothed belt guard and cylinder head cover.
- -> Turn crankshaft to TDC No. 1 cylinder -arrow-.

Engine removed:

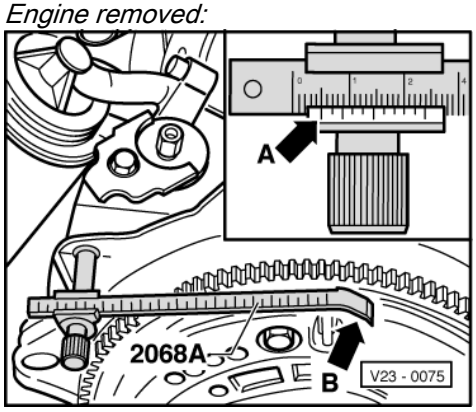

- -> Install adjustment device 2068 A as shown.
- Set adjusting device to 5 mm -arrow A-. The left-hand mark on the scale is the reference point.
- Turn crankshaft until flywheel TDC marking aligns with point of setting device -arrow B-.

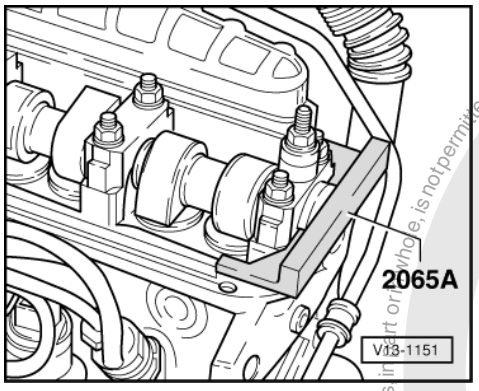

- -> Lock camshaft with setting bar.
- Centralize setting bar as follows:
  Turn arrested camshaft so that one end of setting bar contacts the cylinder head. Using feeler gauge establish the gap at the other end of the setting bar. Place a feeler gauge corresponding to half the gap between setting bar and cylinder head. Turn camshaft until the setting bar contacts the feeler gauge. Place a 2nd feeler gauge, of same thickness, at the other end between setting bar and cylinder head.

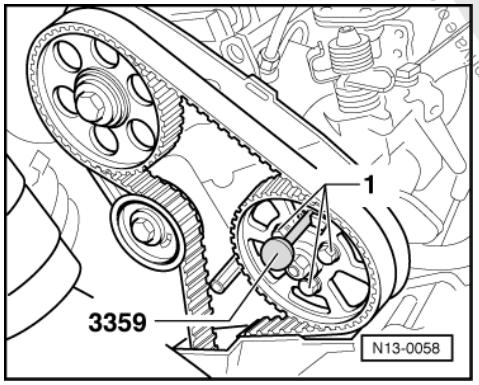

- -> Lock injection pump sprocket with pin 3359.
- Loosen injection pump sprocket securing bolts -1-.
- Remove tensioning roller nut.
- Remove toothed belt from camshaft and injection pump sprockets.

Protected by copyright. Copying for private or commercial purposes, in part or in whole, is not permitted unless authorised by Volkswagen AG. Volkswagen AG does not guarantee or accept any liability with respect to the correctness of information in this document. Copyright by Volkswagen AG.
satelettronica

- Pull fuel supply and return hoses off injection pump.
- Unbolt all fuel lines at fuel pump.

Note:

Use slotted ring spanner 3035 to remove high pressure fuel pipes.

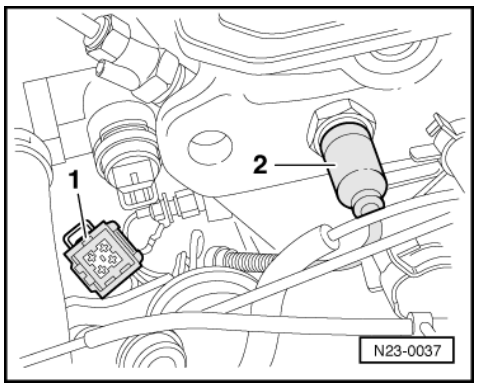

- Cover openings with a clean cloth.
- Pull accelerator cable off control lever and support bracket.
- -> Pull connector -1- off engine temperature sender and connector -2- off oil pressure switch.
- Pull connector off oil pressure switch on oil filter bracket.
- Remove wiring for glow plugs.

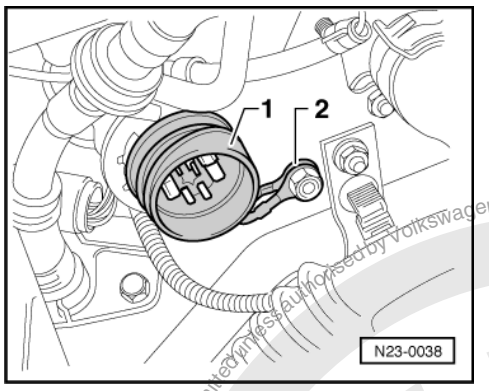

- -> Disconnect multi-pin connector and unclip connector from retainer.
- Remove earth cable -2-.

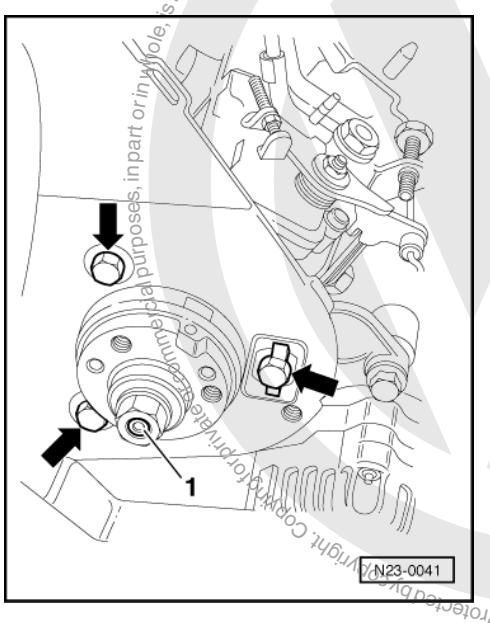

satelettronica
Protected by copyright. Copying for private and commercial purposes, in part or in whole, is not permitted unless authorised by Volkswagen AG. Volkswagen AG does not guarantee or accept any liability with respect to the correctness of information in this document. Copyright by Volkswagen AG.

- -> Remove securing bolts from console -arrows-.

Note:

On no account must the nut -1- for the hub be loosened. Otherwise the injection pump basic setting will be altered and this cannot be reset with normal workshop equipment.

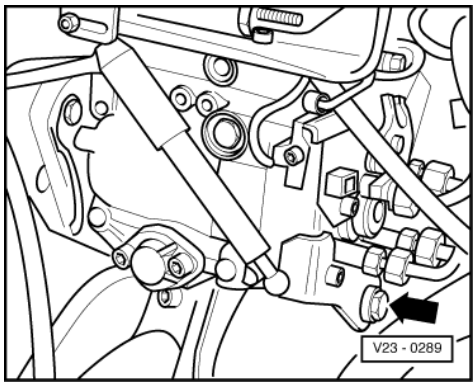

- -> Then remove bolt from rear support -arrow-.
- Take off injection pump.

Installing

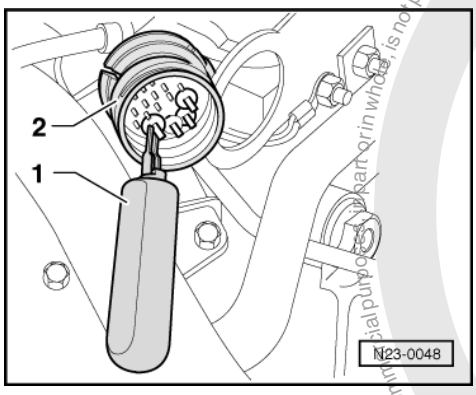

-> If the injection pump is replaced, the spade contacts must be pushed out of the multi-pin connector with the spade terminal release tool.

1 - Spade terminal release tool
2 - Multi-pin connector

Injections pumps supplied as a replacement part, are not fitted with a multi-pin connector. The spade connectors on the wires must be located in the multi-pin connector in accordance with the current flow diagram:

=> Current flow diagrams, Electrical fault finding and Fitting locations binder

- Insert injection pump into console and then tighten securing bolt on rear support with conical nut first.
- Insert front securing bolts and tighten to 25 Nm.
- Fit bolts for securing injection pump sprocket to hub but do not tighten.
- Align injection pump sprocket to central position in elongated holes.

Protected by copyright. Copying for private or commercial purposes, in part or in whole, is not permitted unless authorised by Volkswagen AG. Volkswagen AG does not guarantee or accept any liability with respect to the correctness of information in this document. Copyright by Volkswagen AG.
satelettronica

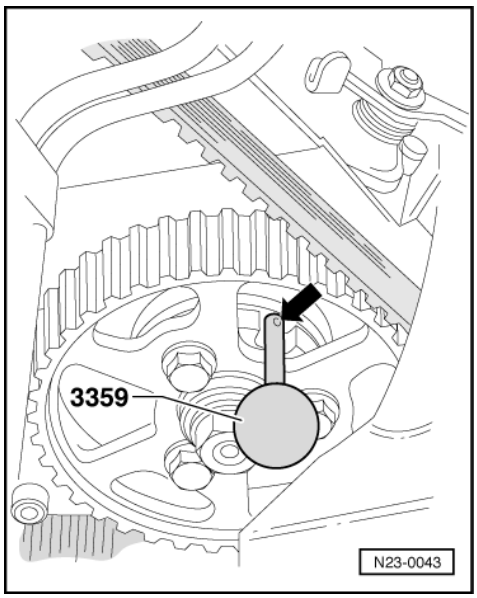

- -> Lock injection pump sprocket with pin 3359.
- Loosen camshaft sprocket securing bolt a half turn.

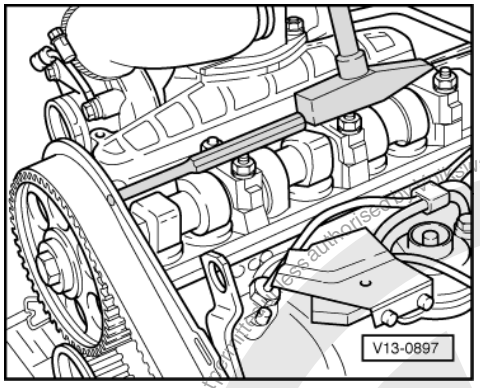

- -> Place a drift through hole in the rear of the toothed belt guard and release the camshaft sprocket from camshaft taper with a blow from a hammer.
- Check whether TDC mark on flywheel and reference mark are aligned.
- Fit toothed belt.

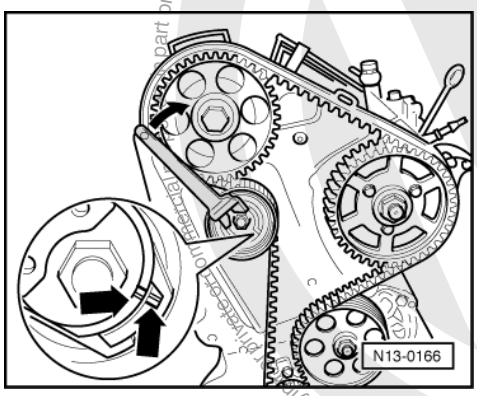

- -> Tension toothed belt. Using pin wrench (e.g. Matra V159) on eccentric turn clockwise until the notch and the raised mark -arrows- align.
- Tighten securing nut to 20 Nm.
- Check TDC mark on flywheel again.
- Tighten injection pump sprocket securing bolts to 25 Nm.
- Tighten camshaft sprocket securing bolt to 45 Nm.
- Remove locking pin 3359.
- Remove setting bar 2065A from camshaft.

satelettronica

- Turn crankshaft two rotations in engine D.O.R. until crankshaft is set to TDC No. 1 cylinder again.
- Check whether injection pump sprocket can be locked with pin 3359.

If the injection pump sprocket cannot be locked:

- Loosen injection pump sprocket securing bolts.
- Turn injection pump sprocket hub until the pin fits.
- Tighten injection pump sprocket securing bolts to
  25 Nm.

- Fill injection pump with clean Diesel.
- Reconnect injection pipes, fuel pipes and electrical wiring.

Note:

Do not interchange fuel supply and return pipe banjo bolts the return pipe banjo bolt has a smaller internal diameter and "OUT" is marked on the hexagon head.

- Install toothed belt guard, cylinder head cover and intake hose.
- Match new injection pump to electronic immobilizer.

=> Electrical system; Repair group 01; Immobilizer self-diagnosis; Matching fuel cut-off valve to immobilizer control unit Immobilizer self-diagnosis Matching fuel cut-off valve to immobilizer control unit

- Check idling speed and governed speed => Page 30 .

1.9 - Checking and adjusting injection pump timing

Special tools, testers and auxiliary items

- Setting bar 2065 A
- Pin 3359
- Torque wrench V.A.G 1331 (5...50 Nm)

With engine removed:

- Adjusting device 2068 A

Test sequence

- Remove intake hose between air cleaner and intake manifold.

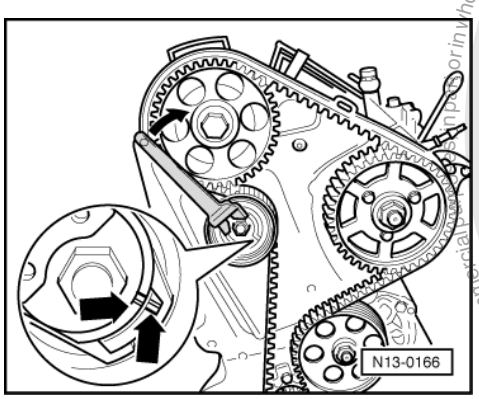

- Remove upper toothed belt guard.
- -> Check toothed belt tension. The notch and raised portion -arrows- must align.

If markings do not align:

satelettronica
Protected by copyright. Copyright by Volkswagen AG.
Copying for private or commercial purposes, in part or in whole is not permitted unless authorised by Volkswagen AG. Volkswagen AG does not guarantee or accept any liability with respect to the correctness of information in this document.

- Adjust toothed belt tension:

=> Repair group 13; Dismantling and assembling engine; Removing and installing toothed belt and adjusting tension. Dismantling and assembling engine Removing and installing toothed belt and adjusting tension.

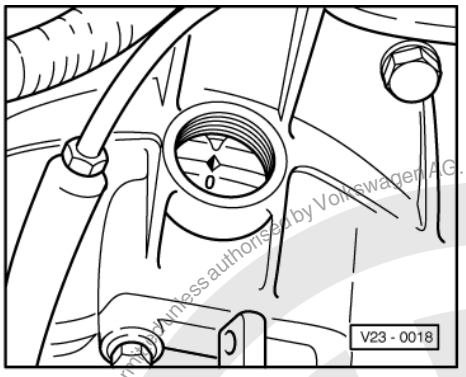

- -> Turn crankshaft to TDC No. 1 cylinder -arrow-.

Engine removed:

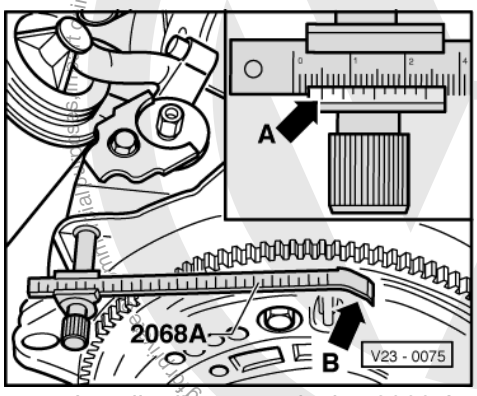

- -> Install adjustment device 2068 A as shown.
- Set adjusting device to 5 mm -arrow A-. The left-hand mark on the scale is the reference point.
- Turn crankshaft until flywheel TDC marking aligns with point of setting device -arrow B-.

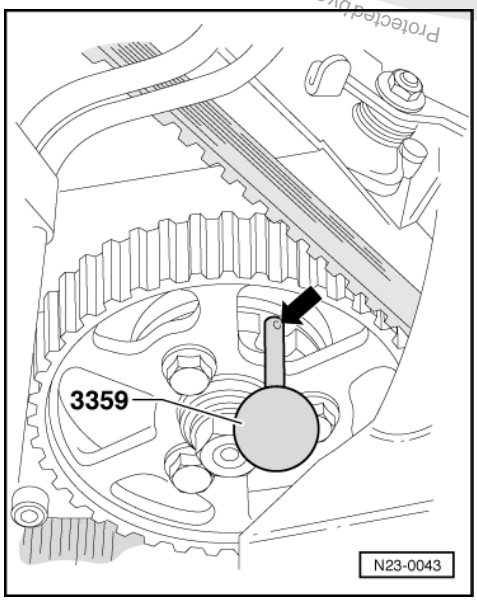

- -> Check if injection pump sprocket can be locked with locking pin 3359.

Protected by copyright. Copyright by Volkswagen AG.
Volkswagen AG does not guarantee or accept any liability with respect to the correctness of information in this document.
satelettronica

If the pin cannot be pushed into the holes, the commencement of injection must be reset as follows:
- Remove cylinder head cover.

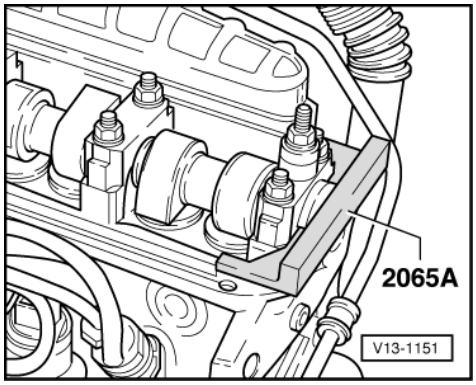

- -> Lock camshaft with setting bar.
- Centralize setting bar as follows:
  Turn arrested camshaft so that one end of setting bar contacts the cylinder head. Using feeler gauge establish the gap at the other end of the setting bar. Place a feeler gauge corresponding to half the gap between setting bar and cylinder head. Turn camshaft until the setting bar contacts the feeler gauge. Place a 2nd feeler gauge, of same thickness, at the other end between setting bar and cylinder head.

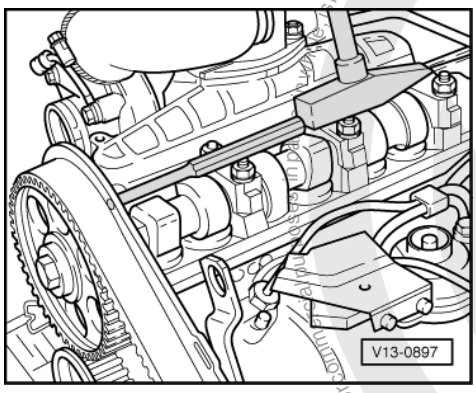

- Loosen camshaft sprocket securing bolt a half turn.
- -> Place a drift through hole in the rear of the toothed belt guard and release the camshaft sprocket from camshaft taper with a blow from a hammer.

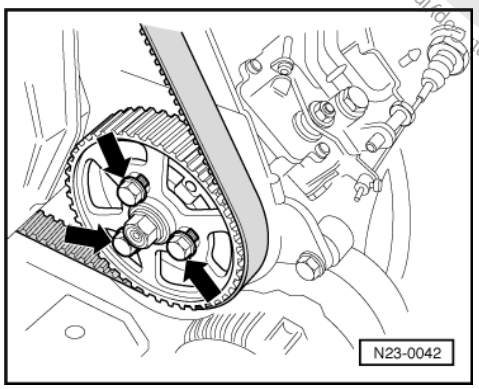

- -> Loosen injection pump sprocket securing bolts -arrows-.
- Turn injection pump sprocket hub until the pin fits.
- Check TDC mark on flywheel again.
- Tighten camshaft sprocket securing bolt to
  45 Nm.
- Tighten injection pump sprocket securing bolts to
  25 Nm.
- Remove locking pin 3359.
- Remove setting bar 2065A from camshaft.

Protected by copyright. Copying for private or commercial purposes, in part or in whole, is not permitted unless authorised by Volkswagen AG. Volkswagen AG does not guarantee or accept any liability with respect to the correctness of information in this document. Copyright by Volkswagen AG.
satelettronica

- Turn crankshaft two rotations in engine D.O.R. until crankshaft is set to TDC No. 1 cylinder again.

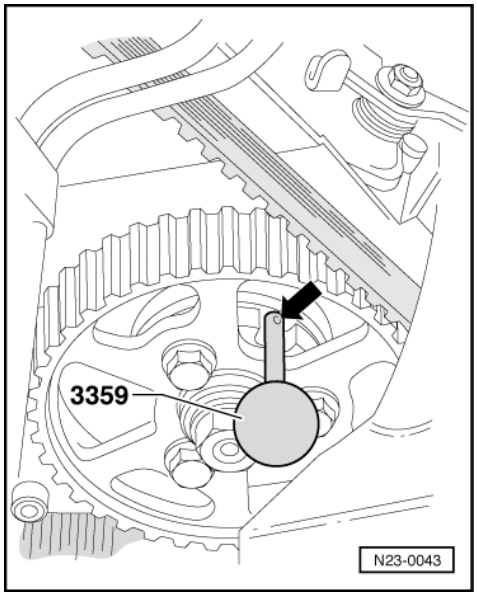

- -> Check whether injection pump sprocket can be locked with pin 3359.

If the injection pump sprocket cannot be locked:

- Loosen injection pump sprocket securing bolts.
- Turn injection pump sprocket hub until the pin fits.
- Tighten injection pump sprocket securing bolts to 25 Nm.

- Install toothed belt guard, cylinder head cover and intake hose.

1.10 - Checking and adjusting idling speed, idling speed boost and governed speed

Special tools, testers and auxiliary items

- Ignition tester V.A.G 1767 or V.A.G 1367
- T spanner 3231

Checking and adjustment conditions

- Oil temperature at least 60 °C.
- Electric consumers switched off.

Work sequence

The engine speed can also be measured in measured value block of self-diagnosis with fault reader V.A.G 1551.

- Connect ignition tester V.A.G 1367 or ignition tester V.A.G 1767.
- Start the engine and run at idling speed.

Protected by copyright. Copying for private or commercial purposes, in part or in whole, is not permitted unless authorised by Volkswagen AG. Volkswagen AG does not guarantee or accept any liability with respect to the correctness of information in this document. Copyright by Volkswagen AG.
satelettronica

Idling speed

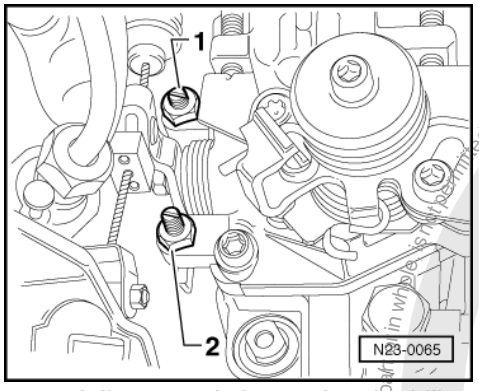

- -> Adjustment is by turning the idling speed adjustment screw -1-, with the T spanner 3231.
  Specification: 900± 30 rpm

Idling speed boost

When engine is cold or when switching on the air conditioner the idling speed will be increased by the idling speed boost actuator.

- Press lever against stop adjustment screw -2- by hand (when engine is warm). The engine speed must increase to
  1050± 50 rpm.

If idling speed is not to specification 1050± 50 rpm:

- Release stop screw locking nut -2- and adjust increased idling speed to 1050 rpm by turning the stop screw.
- Lock stop screw.
- Check idling speed => Page 31 .

Engine governed speed (no load)

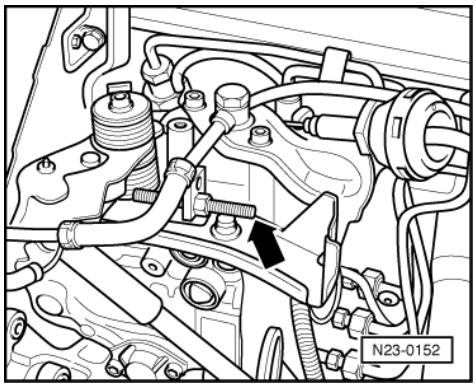

- -> Rev. up to maximum speed and set engine speed using adjustment screw -arrow- to
  Specification: 5050 ±100 rpm
- Lock adjusting screw.

Protected by copyright. Copying for private or commercial purposes, in whole or in part, is not permitted unless authorised by Volkswagen AG. Volkswagen AG does not guarantee or accept any liability with respect to the correctness of information in this document. Copyright by Volkswagen AG.
satelettronica

1.11 - Idling speed boost actuator

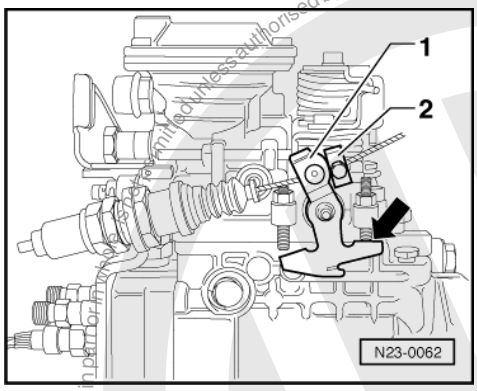

When the engine is cold or when switching on the air conditioner the idling speed will be increased by the idling speed boost actuator. If this actuator is replaced, it is to be connected as follows with the engine cold:

Electrical actuator

For vehicles without air conditioner

- -> Press control lever -1- against idling speed boost stop screw -arrow- and clamp clamping piece -2- so there is no play.

Pneumatic actuator

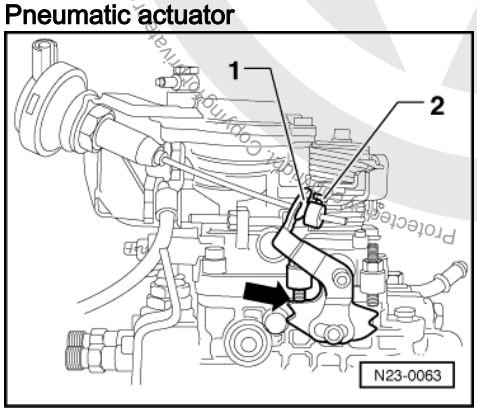

For vehicles with air conditioner

- -> Press control lever -1- against idling speed boost stop screw -arrow- and clamp clamping piece -2- so there is no play.

1.12 - Checking commencement of injection valve

Special tools, testers and auxiliary items

- Hand multimeter V.A.G 1526

Test sequence

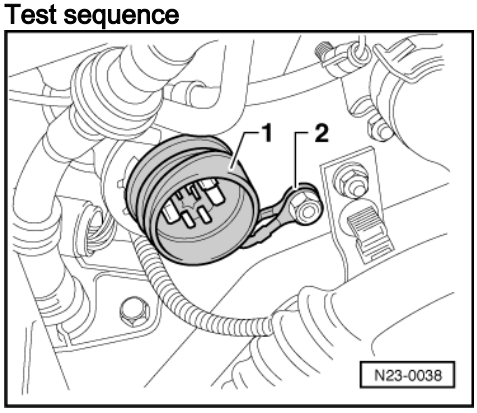

Protected by copyright. Copyright by Volkswagen AG. Volkswagen AG does not guarantee or accept any liability with respect to the correctness of information in this document. Copyright by Volkswagen AG.
satelettronica

- -> Separate multi-pin connector -1- and unclip from retainer.
- Carry out resistance measurement between contacts 2 + 3 using hand multimeter V.A.G 1526.
  Specification: 12 ... 20 ω

Multi-pin connector assignment:

=> Current flow diagrams, Electrical fault finding and Fitting locations binder

If the specification is not attained:

- Replace commencement of injection valve (N108)
  =>Page 18

1.13 - Checking engine temperature sender

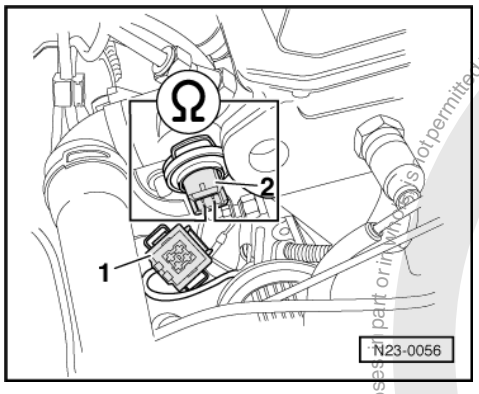

Special tools, testers and auxiliary items

- Hand multimeter V.A.G 1526

Test sequence

- Switch off ignition.
- -> Pull connector -1- off sender.
- Perform resistance measurement between sender -2- sockets 1 + 3 using hand multimeter; Specification => table.

1.14 - Resistance figures for engine temperature sender

Temperature	Resistance figure	Temperature	Resistance figure
-20°C	5.40....7.30kω	+20°C	0.922 1.158kω
-15°C	4.30...5.70kω	+60°C	225...265ω
-10°C	3.30...4.30kω	+90°C	96...108ω
-05°C	2.70...3.40kω	+120°C	44.5...50.5ω
0°C	2.13....2.77kω		

If the specification is not attained:

- Replace coolant temperature sender.

Copyright by Volkswagen AG. Volkswagen AG does not guarantee or accept any liability with respect to the correctness of information in this document. Copyright by Volkswagen AG. Protected by copyright. Copying for private or commercial purposes, in part or in whole, is not permitted unless authorised by Volkswagen AG.
satelettronica

1.15 - Checking idling speed boost valve

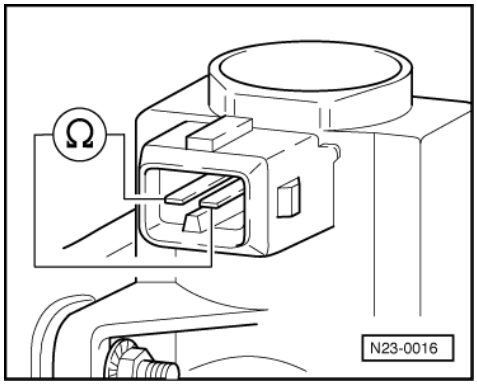

Special tools, testers and auxiliary items

- Hand multimeter V.A.G 1526

Test sequence

- Pull connector off idling speed boost valve.
- -> Measure resistance at valve.
  Specification: 50 ... 65 ω

If the specification is not attained:

- Replace valve.

1.16 - Checking full throttle stop valve

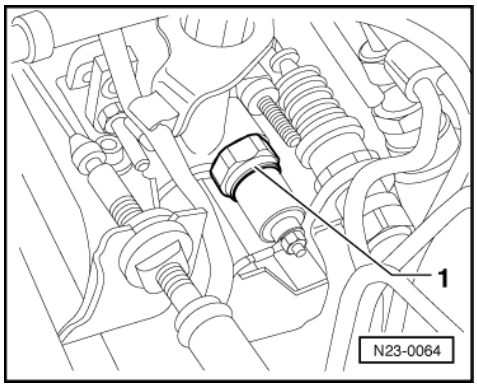

Special tools, testers and auxiliary items

- Hand multimeter V.A.G 1526

- -> The naturally aspirated Diesel engines are equipped with a full throttle stop valve -1-. This is to reduce the full throttle quantity at altitude.

Test sequence

- Perform resistance measurement with multimeter V.A.G 1526 between voltage supply connection and earth:
  Specification: 8...12 ω (at room temperature)

Protected by copyright. Copying for private or commercial purposes, in part or in whole, is not permitted unless authorised by Volkswagen AG. Volkswagen AG does not guarantee or accept any liability with respect to the correctness of information in this document. Copyright by Volkswagen AG.
satelettronica

1.17 - Residual volume basic setting

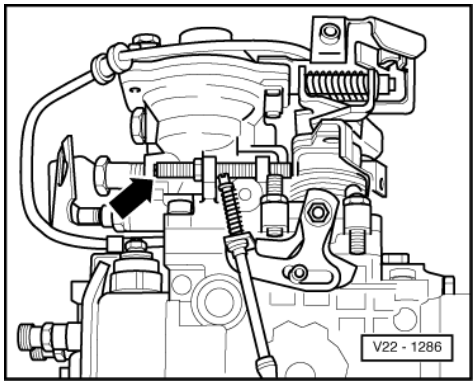

-> The residual volume screw -arrow- must not normally be altered.

The manufacturer sets the so-called residual volume via this screw on a test bench..

If the screw has nevertheless been altered, this may result in the following complaints:

- Screw turned in = residual volume too large.
  In this case the engine runs too fast and it is not possible to set idling speed.
- Screw turned out (gap at adjusting lever) = residual volume too small.
  This causes performance faults such as "flat spot" when pulling away and accelerating from low engine rpm or jerking in all gears.

If such faults occur, the following basic setting must be performed at the residual volume adjusting screw.

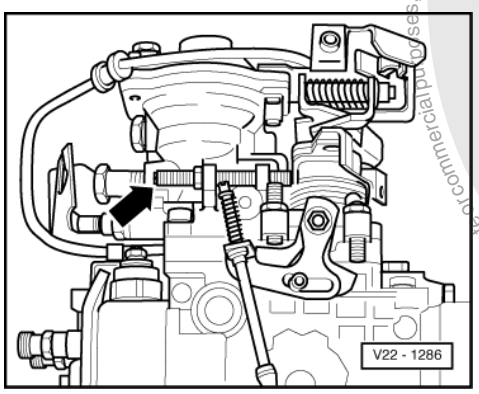

- -> Release adjusting screw -arrow- lock nut.

Residual volume too low: (Performance faults)

- Screw adjusting screw in until idling speed increases.
- Turn adjusting screw back a half turn from the point at which the idling speed increases.

Residual volume too large: (Engine speed too high)

- Unscrew adjusting screw until engine speed no longer decreases.
- Screw in adjusting screw again until idling speed increases.
- Turn adjusting screw back a half turn from the point at which idling speed increases.
- Lock adjusting screw.

Protected by copyright. Copying for private or commercial purposes, in part or in whole is not permitted unless authorised by Volkswagen AG. Volkswagen AG does not guarantee or accept any liability with respect to the correctness of information in this document. Copyright by Volkswagen AG.
satelettronica

1.18 - Removing and installing injectors

Special tools, testers and auxiliary items

- Ring spanner 3035
- Torque wrench V.A.G 1331 (5...50 Nm)
- Torque wrench V.A.G 1332 (40...200 Nm)

Note:

Defective injectors cause the following faults:

- Misfiring
- Knocking in one or more cylinders
- Engine over-heating
- Loss of power
- Excessive black exhaust smoke
- Higher fuel consumption
- Excessive blue smoke when starting from cold

Defective injectors can be located by loosening the high pressure pipe union on each injector in turn with the engine running at a fast idling speed. If engine speed remains constant after loosening a pipe union, this indicates a defective injector.

Removing

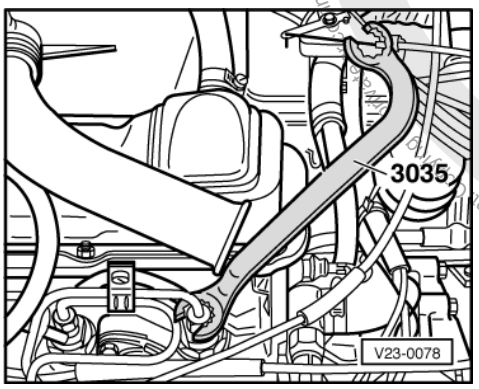

- -> Remove injection pipes with a slotted ring spanner 3035.

Note:

Always remove pipe set complete. Do not alter pipe shape.

- Remove injectors with 27 mm socket.

Installing

Note:

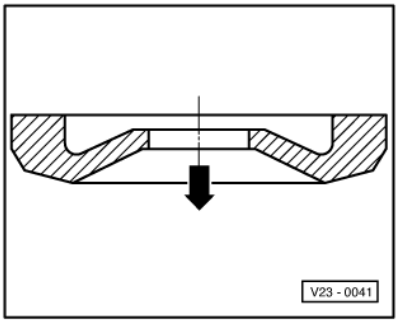

Protected by copyright. Copyright by Volkswagen AG. Volkswagen AG does not guarantee or accept any liability with respect to the correctness of information in this document. Copyright by Volkswagen AG.
satelettronica

Always renew heat shield between cylinder head and injectors.

-> Installation position of heat shield:
Arrow points towards cylinder head.

Tightening torques:
Injection pipes = 25 Nm
Injectors = 70 Nm

Note:

Always renew heat insulating seal between cylinder head and injectors.

1.19 - Servicing injectors

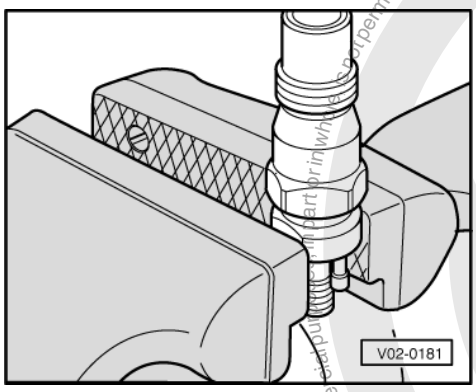

Special tools, testers and auxiliary items

- Torque wrench V.A.G 1332 (40...200 Nm)

Work sequence

- -> Tighten injector upper part in a vice and loosen threaded union.
- So that the individual parts do not fall out, tighten injector lower part in vice and dismantle injector.

When dismantling the injector ensure individual parts are not interchanged.

Tightening torque:
Injector upper and lower parts 70 Nm

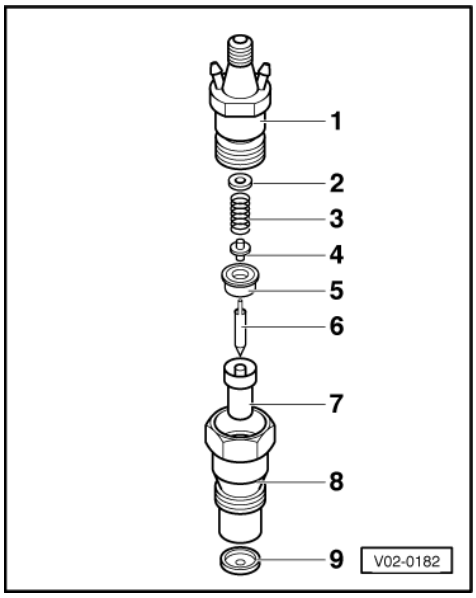

Volkswagen AG. Volkswagen AG does not guarantee or accept any liability with respect to the correctness of information in this document. Copyright by Volkswagen AG.
Protected by copyright. Copying for private or commercial purposes, in part or in whole, is not permitted unless authorised by Volkswagen AG.
satelettronica

-> Injector components

1 - Injector upper part
2 - Shim
3 - Nozzle valve spring
4 - Pressure pin
5 - Nozzle valve retainer insert
6 - Nozzle valve (needle)
7 - Nozzle body
8 - Injector
9 - Heat insulating seal

1.20 - Checking injector nozzle valve tip for damage, injection pressure and for leakage.

Special tools, testers and auxiliary items

- Injector tester V.A.G 1322

Checking injector nozzle valve tip for damage

(Visual check)

If injector nozzle valve tip is damaged e.g. broken off or deformed, renew injector or nozzle body and nozzle valve (needle).

Checking injection pressure

Warning!
When testing injectors ensure that the jet of fuel does not contact the hands as the high pressure will cause the fuel to penetrate the skin and may cause severe injuries.

Test conditions

- Pressure gauge on

Test sequence

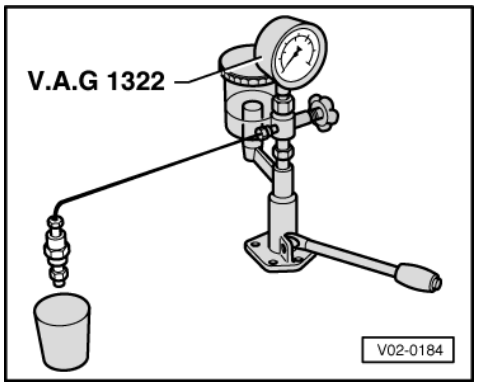

- -> Connect injector to injector test unit.
- Move pump lever down slowly. When spray begins, read off breaking pressure. Specification incorrect; adjust breaking pressure by exchanging shims.
  Specification:
  New injectors: 130 ... 138 bar
  Wear limit: 120 bar

Protected by copyright. Copying for private or commercial purposes, in part or whole, is not permitted unless authorised by Volkswagen AG. Volkswagen AG does not guarantee or accept any liability with respect to the correctness of information in this document. Copyright by Volkswagen AG.
satelettronica

Note:

When servicing used injectors adjust breaking pressures to specifications for new injectors.

- Thicker shims increase breaking pressure.
- Thinner shims decrease breaking pressure.
- Increasing spring compression by 0.5 mm increases breaking pressure by 5.0 bar

Adjustment shims are available from 1.00...1.95 mm thick and increase by 0.5 mm. Use box 3065 to store shims.

Checking for leaks

- Move pump lever down slowly and maintain a pressure of approx. 110 bar for 10 seconds. No fuel should leak from the nozzle tip.

satelettronica

Protected by copyright. Copying for private or commercial purposes, in part or in whole, is not permitted unless authorised by Volkswagen AG. Volkswagen AG does not guarantee or accept any liability with respect to the correctness of information in this document. Copyright by Volkswagen AG.

28 - Glow plug system

1 - Checking glow plug system

1.1 - Checking glow plug system

Note:

The vehicles are equipped with a door contact controlled pre-glow system. After entering the vehicle the pre-glow system automatically starts on closing the driver's door.

Checking door contact control:

=> Current flow diagrams, Electrical fault finding and Fitting locations binder

Test conditions

- Battery voltage at least 11.5 V
- Voltage exists at glow plugs. No voltage, locate fault according to current flow diagram.

1.2 - Checking glow plug current consumption

Special tools, testers and auxiliary items

- Multimeter V.A.G 1715 or V.A.G 1315 A

Test sequence

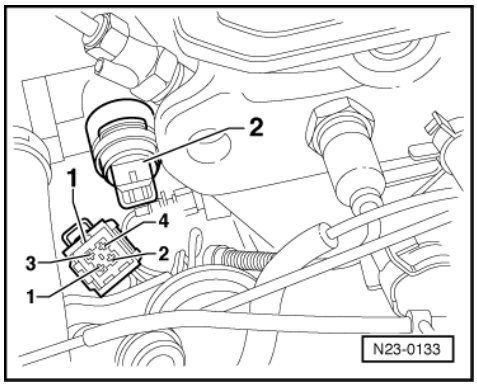

- -> Pull connector -1- off engine temperature sender -2-.

Note:

Pulling the connector off sender, simulates engine condition "cold" and when switching the ignition on the relevant glow period is carried out.

- Place glow plug feed wire in multimeter current clamp.
- Switch on ignition to start pre-glow.
- Start the engine and run at idling speed.
- Read current consumption during extended glow period (approx. 180 sec.) with engine running.

Protected by copyright. Copying for private or commercial purposes, in part or in whole, is not permitted unless authorised by Volkswagen AG. Volkswagen AG does not guarantee or accept any liability with respect to the correctness of information in this document. Copyright by Volkswagen AG.
satelettronica

The current consumption of the glow plugs during the extended glow period is approx. 8 Amp. per glow plug. With a glow plug current consumption of:

Current consumption	Defective glow plug(s)
32 A	0
24 A	1
16 A	2
8 A	3
0 A	4

Note:

Erase fault memory after completing checks

=> Page 6 . (The disconnected engine temperature sender connector is registered as a fault by the self-diagnosis)

1.3 - Checking glow plugs

Special tools, testers and auxiliary items

- Diode test lamp V.A.G 1527
- Adapter set V.A.G 1594

Test sequence

- Remove wiring and busbar for glow plugs.
- Connect diode test lamp wire using auxiliary clips from auxiliary cable set to battery positive (+).
- Place diode test lamp probe on each glow plug one after the other.
  Diode lights up: glow plug OK.
  Diode does not light up: replace glow plug
  (tightening torque: 25 Nm)

Notes:

- The tightening torque of 25 Nm must not be exceeded otherwise the annular gap between glow pin and threaded section will be squeezed together. This may cause the glow plugs to fail prematurely.
- If no fault is found and the engine is still hard to start, the glow plugs should be visually examined whilst glowing (injectors removed).

1.4 - Glow plugs with burned electrodes

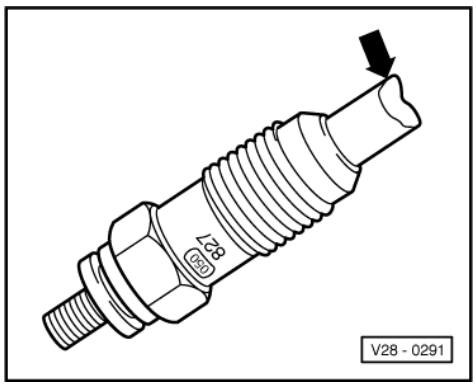

Copyright by Volkswagen AG. Copying for private or commercial purposes, in part or in whole, is not permitted unless authorised by Volkswagen AG. Volkswagen AG does not guarantee or accept any liability with respect to the correctness of information in this document.
satelettronica

Burned electrodes on glow plugs are frequently caused by faulty injectors. Damage of this nature is not due to faults in or on the glow plugs.

If damage of this nature is found -arrow- it is not sufficient merely to replace the glow plug. The injectors must also be tested for opening pressure and leakage => Page 37 .

Protected by copyright. Copying for private or commercial purposes, in part or in whole, is not permitted unless authorised by Volkswagen AG. Volkswagen AG does not guarantee or accept any liability with respect to the correctness of information in this document. Copyright by Volkswagen AG.

satelettronica